AUTOHOME®

OVERLAND SERIES

INSTRUCTIONS

Safety tested
Production monitored
TÜV SÜD
tuv-sud.com/ps-cert

WARNINGS

Avvertenze • Avertissement • Warnungen

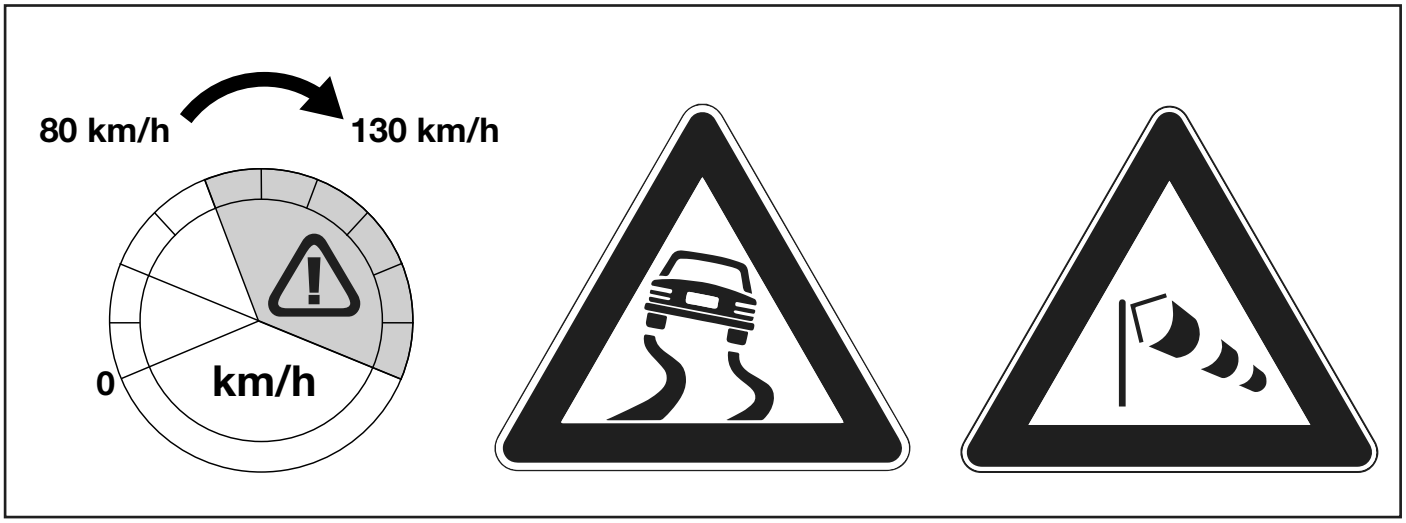

MODELS *Modelle* *Modéles* *Modelli*	TENT WEIGHT *Zeltgewicht* *Poids de la tente* *Peso della tenda*	MAXIMUM OCCUPANTS WEIGHT *Maximales Bewohnergewitch* *Poids Maximum des occupants* *Peso massimo degli occupanti*	MEASURES WHEN CLOSE *Abmessungen bei gesschlossenem Zelt* *Dimensions (tente fermée)* *Misure chiusa*	MEASURES WHEN OPEN *Abmessungen bei offenem Zelt* *Dimensions (tente ouverte)* *Misure aperta*
Overland Small	*ca. 54 kg*	*ca. 180 kg*	*130x110x35 cm*	*130x220x125cm*
Overland Medium	*ca. 63 kg*	*ca. 230 kg*	*160x110x35 cm*	*160x220x125 cm*
Overland Large	*ca. 69 kg*	*ca. 280 kg*	*180x110x35 cm*	*180x220x125 cm*

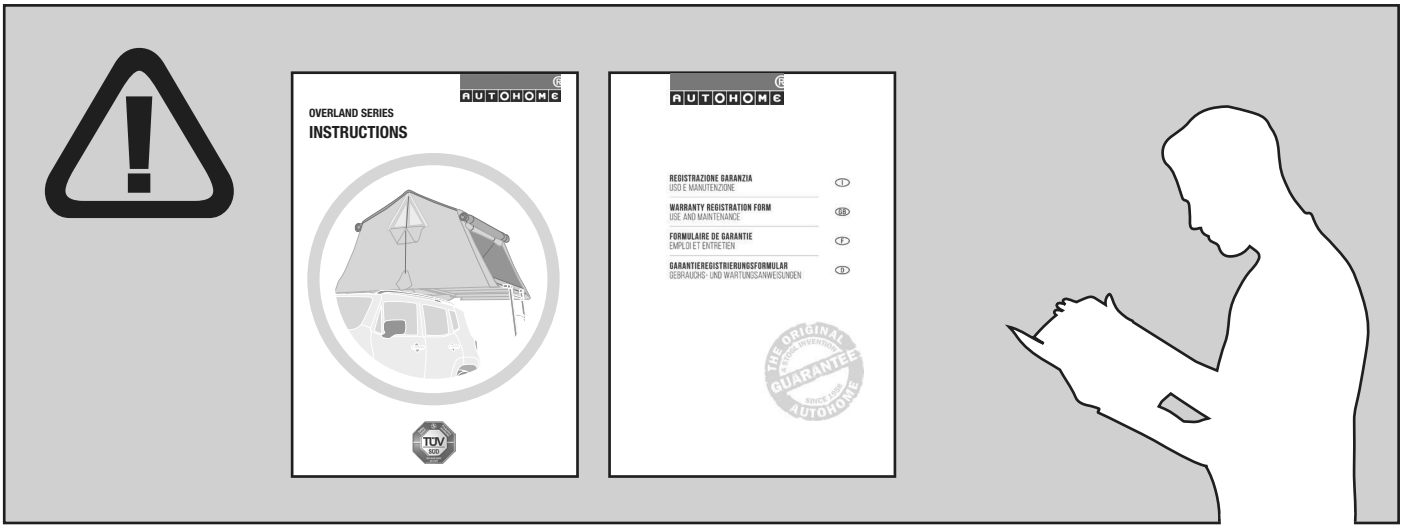
AUTOHOME
OVERLAND SERIES
INSTRUCTIONS
TÜV
AUTOHOME
REGISTRAZIONE GARANZIA
USO E MANUTENZIONE
WARRANTY REGISTRATION FORM
USE AND MAINTENANCE
FORMULAIRE DE GARANTIE
EMPLOI ET ENTRETIEN
GARANTIEREGISTRIERUNGSFORMULAR
GEBRAUCHS- UND WARTUNGSANWEISUNGEN
THE ORIGINAL
GUARANTEE
AUTOHOME

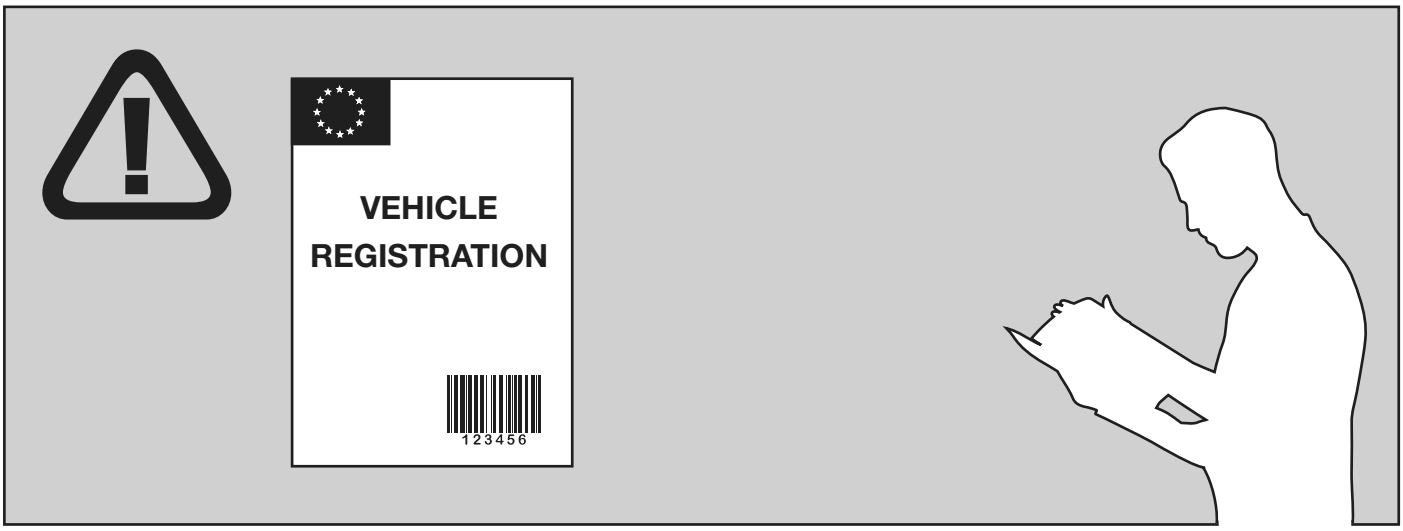
VEHICLE
REGISTRATION
123456

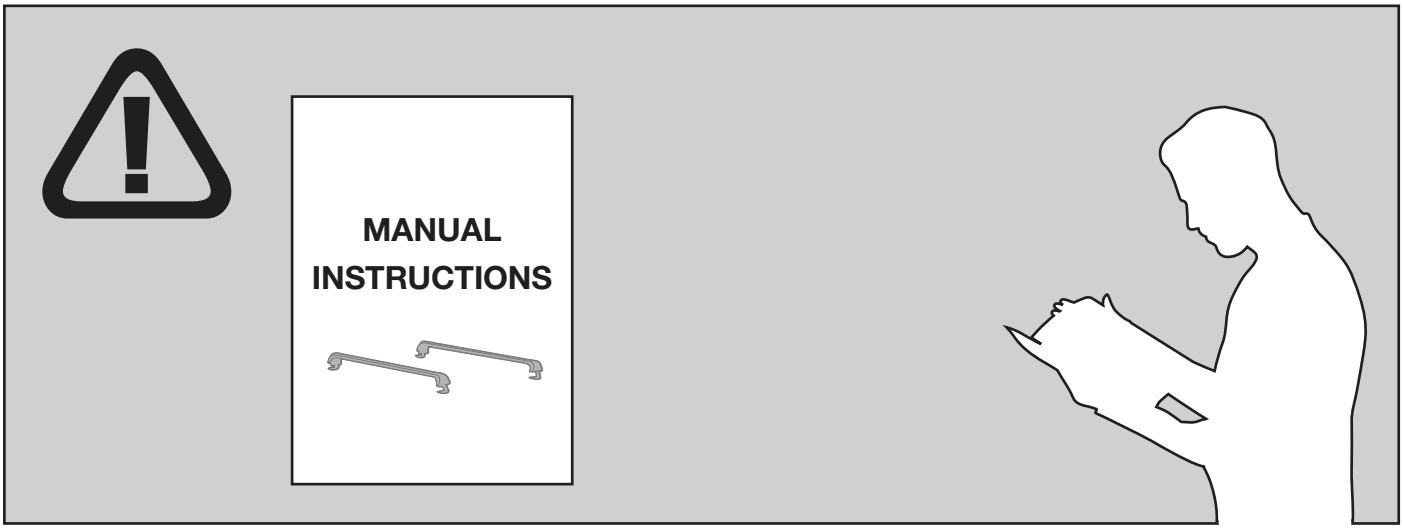
MANUAL
INSTRUCTIONS

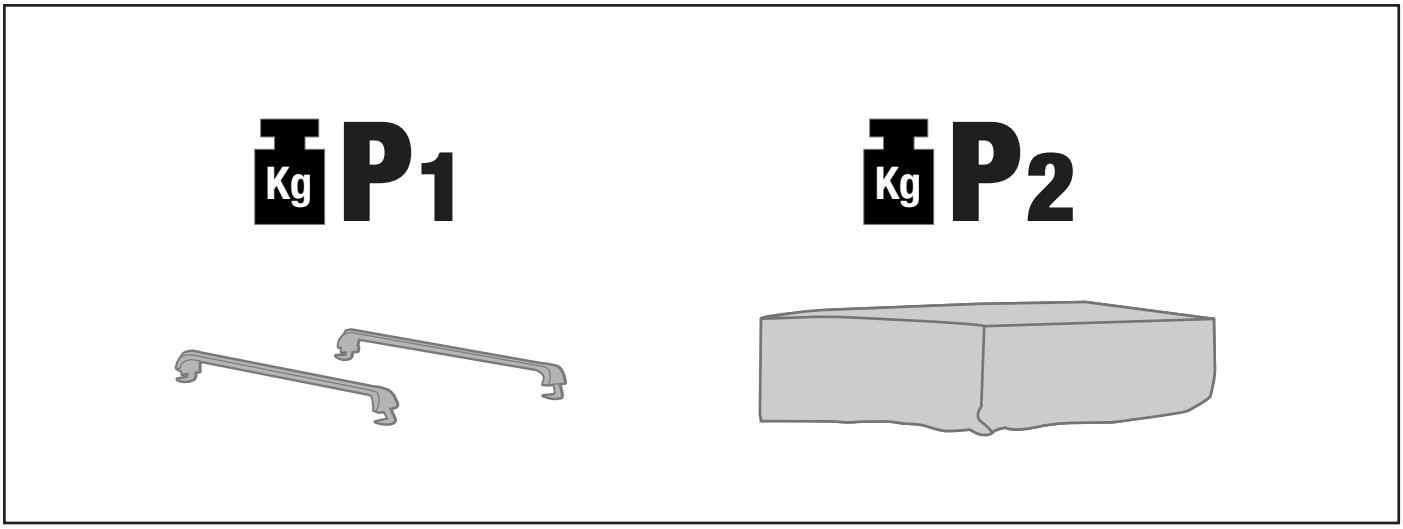
Kg P1
Kg P2

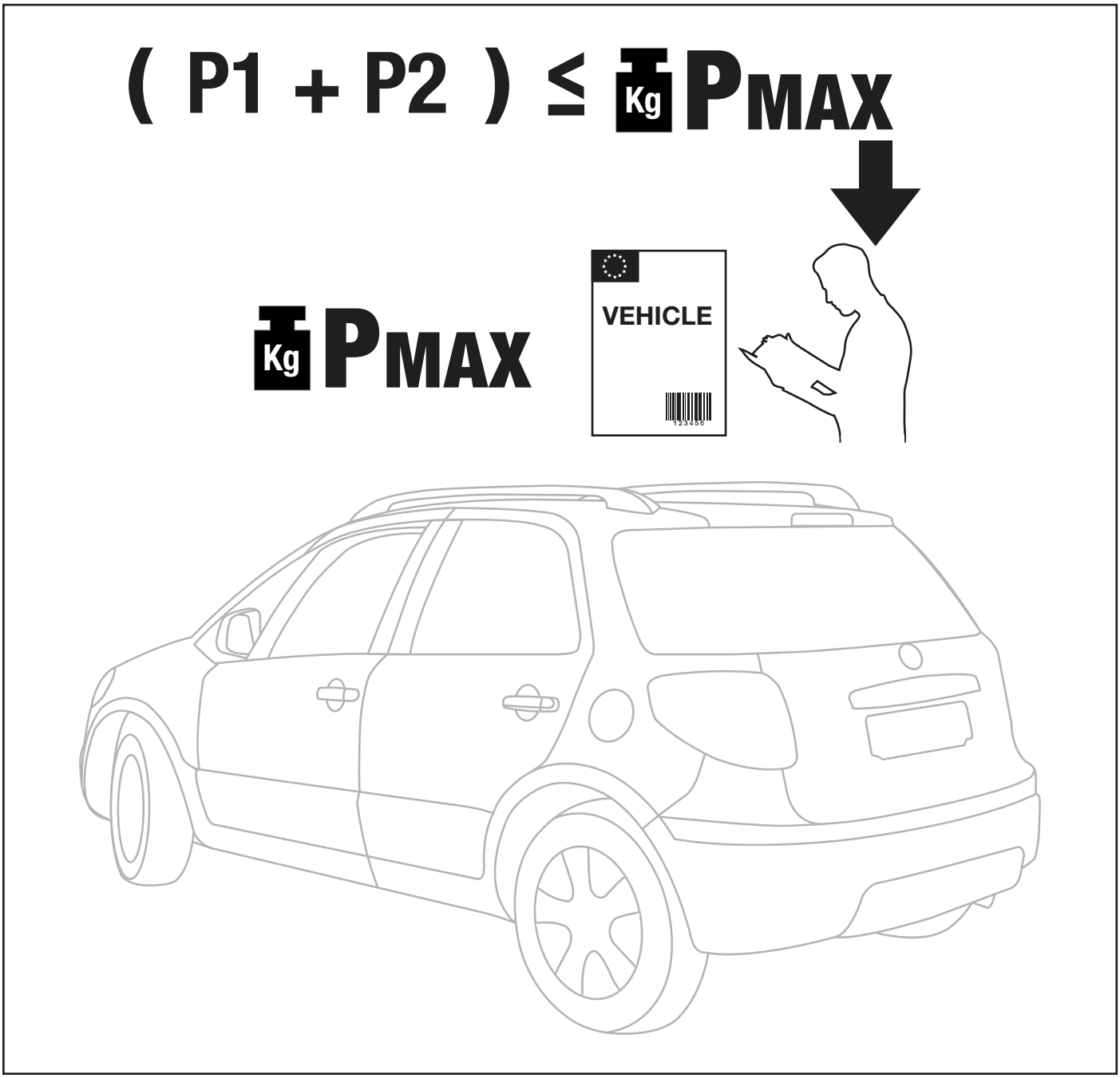
(P1 + P2) ≤ Kg PMAX
Kg PMAX
VEHICLE
123456

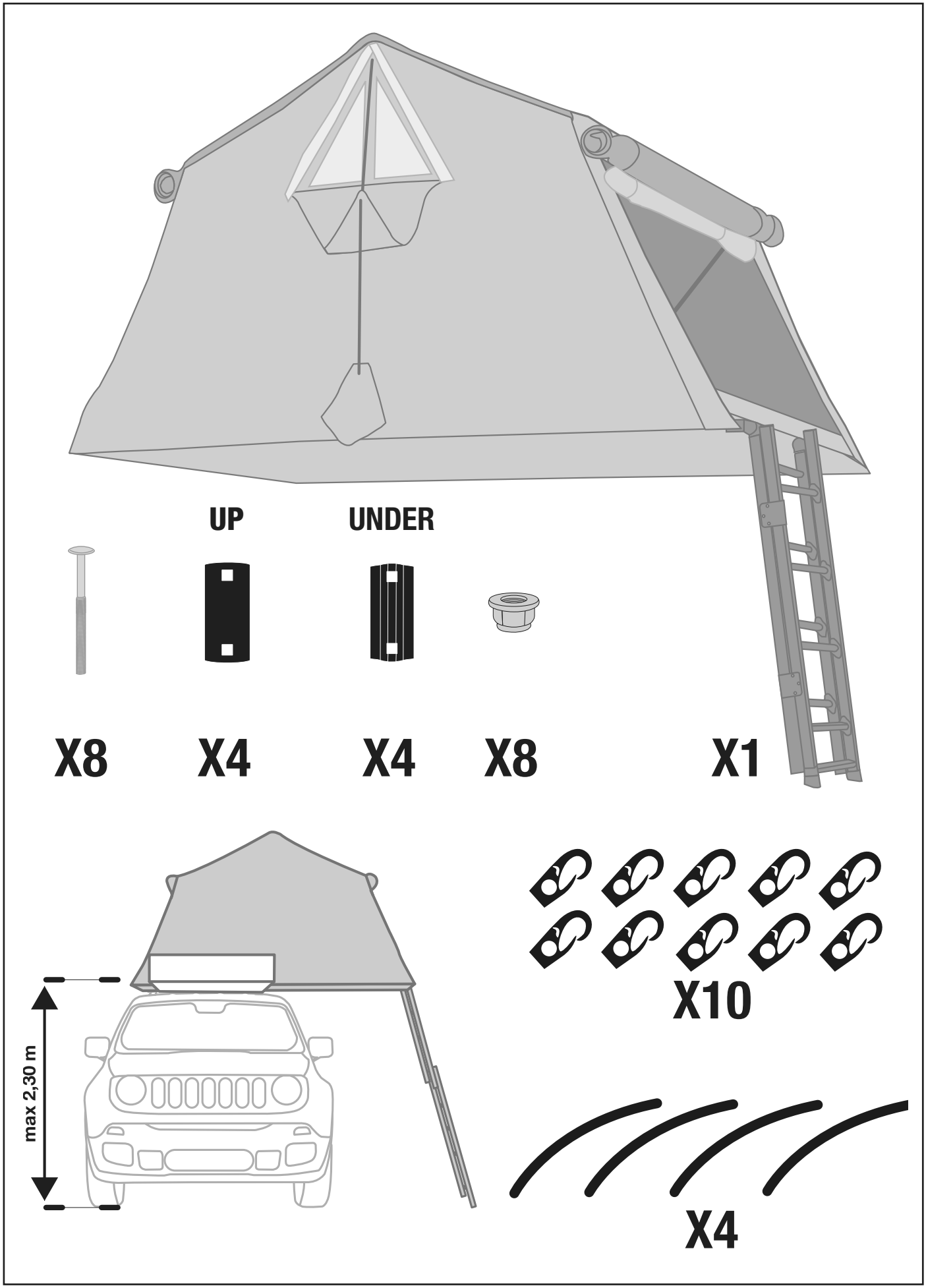
UP
UNDER
X8
X4
X4
X8
X1
max 2,30 m
X10
X4

POSITIONING

Posizionamento • Placement • Platzierung

1

Minimum length

Lunghezza minima • Longueur minimale • Mindestlänge

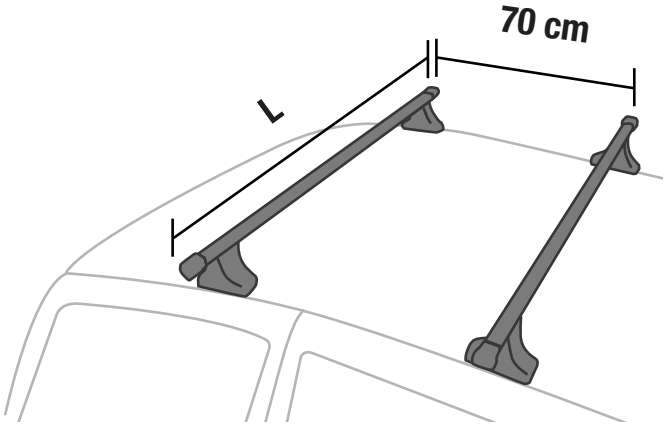

ROOF TENT	L
Overland **Small**	**110 - 120 cm**
Overland **Medium**	**110 - 120 cm**
Overland **Large**	**110 - 120 cm**

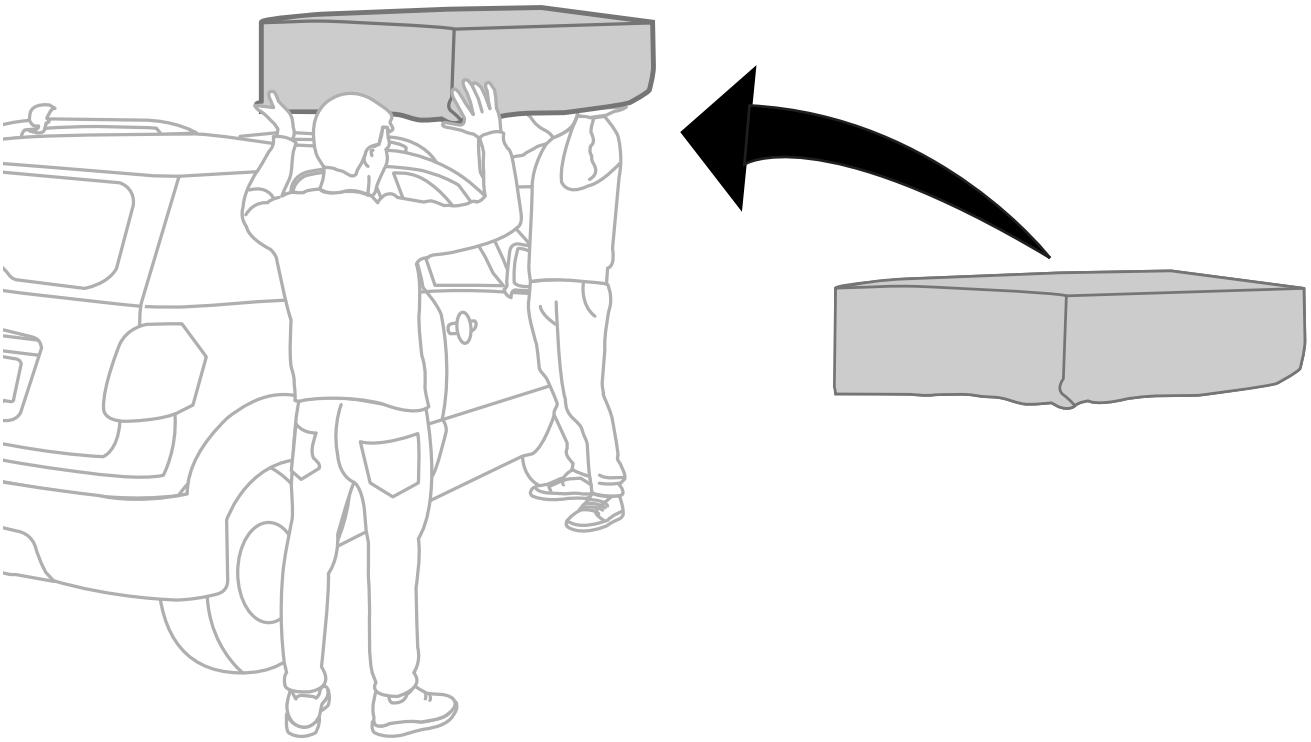

2

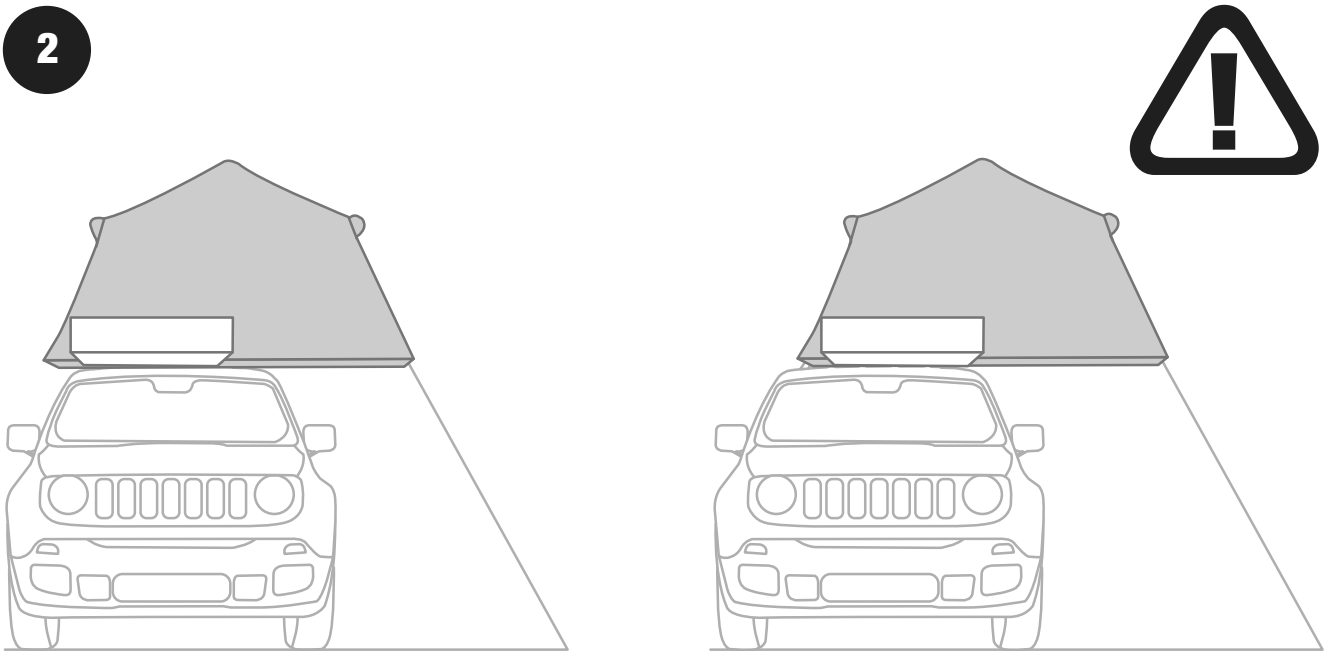

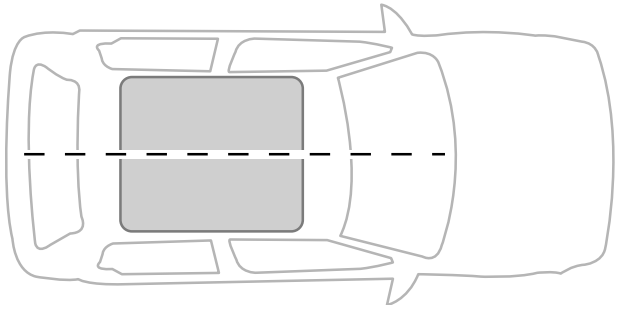

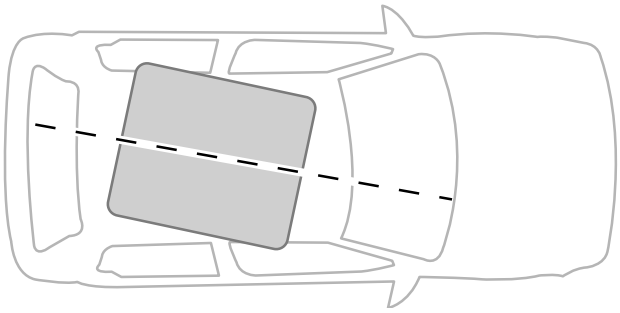

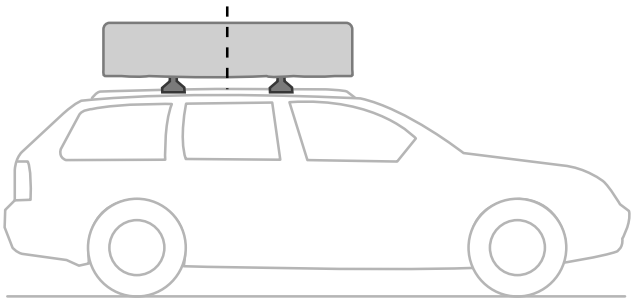

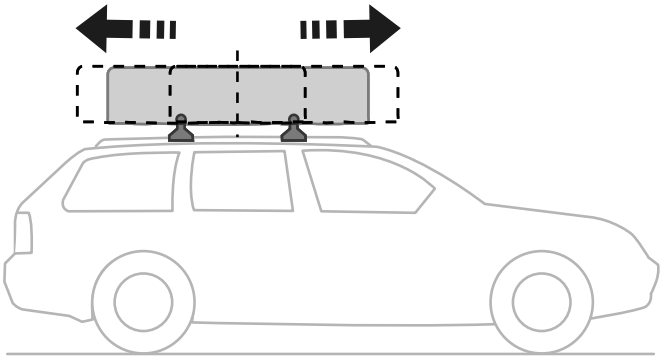

FIXING

Fissaggio • Fixation • Befestigung

STANDARD FIXING OVERLAND SMALL

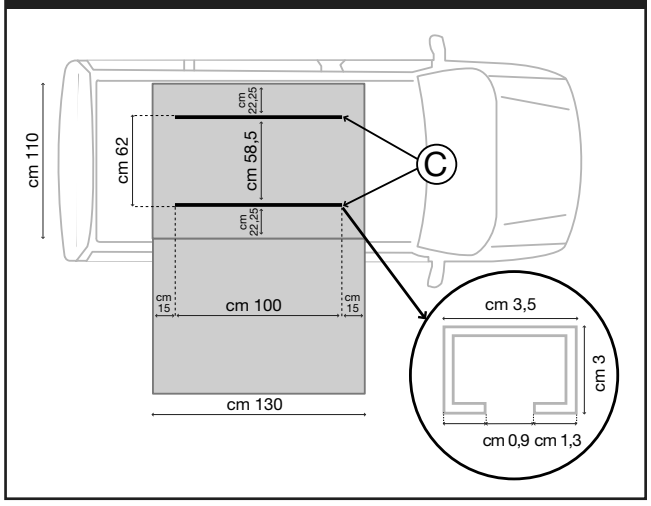

EXPLORER FIXING OVERLAND SMALL

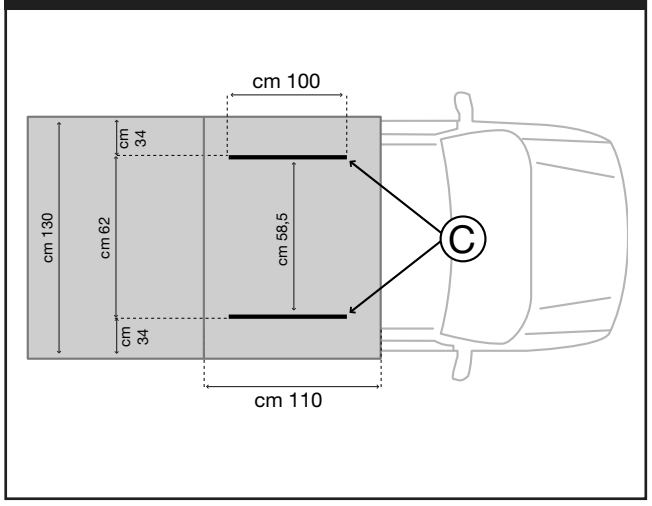

STANDARD FIXING OVERLAND MEDIUM

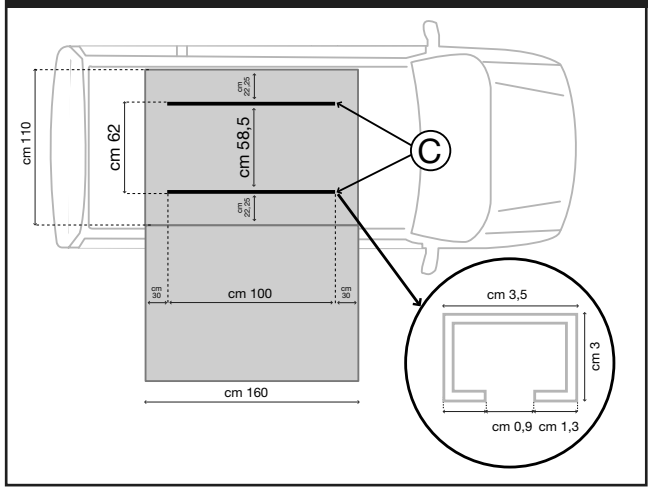

EXPLORER FIXING OVERLAND MEDIUM

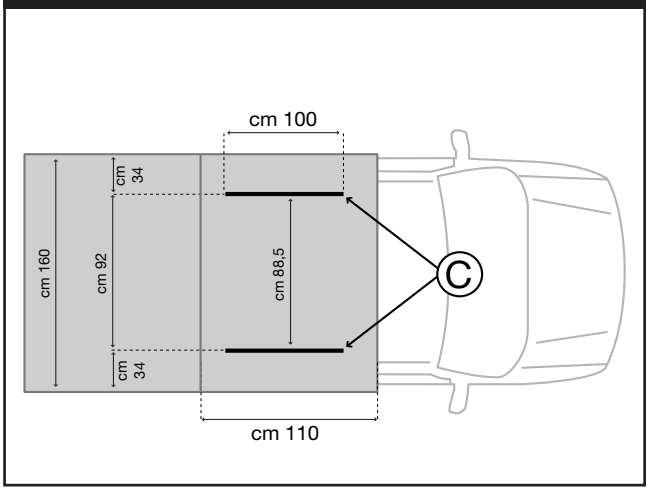

STANDARD FIXING OVERLAND MEDIUM

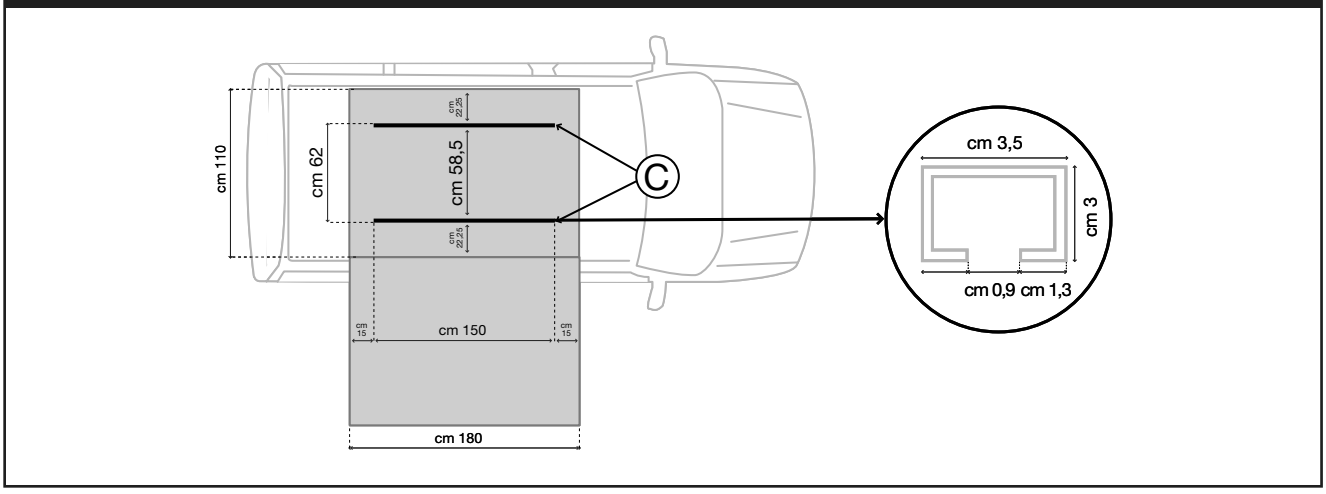

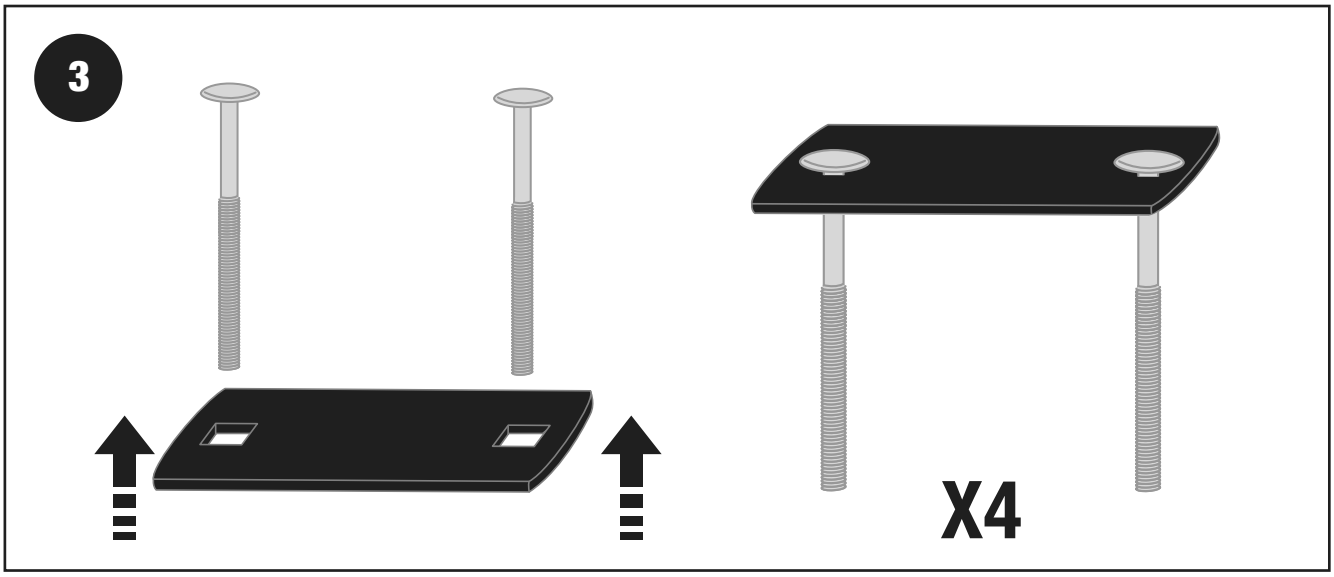
3
X4

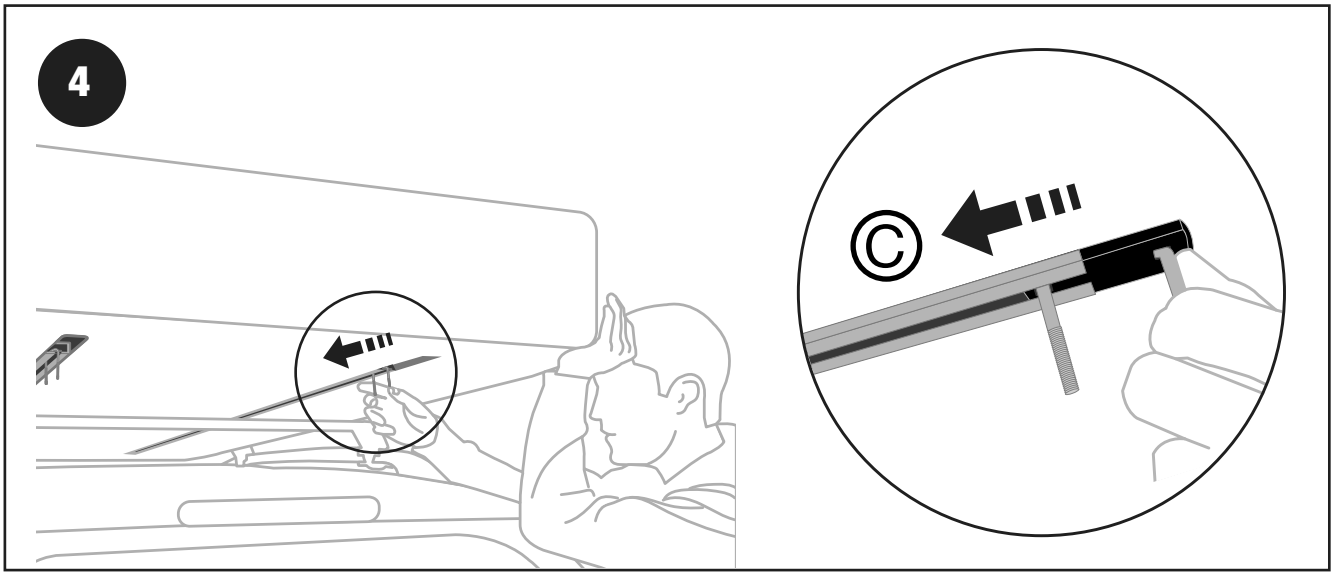
4
©

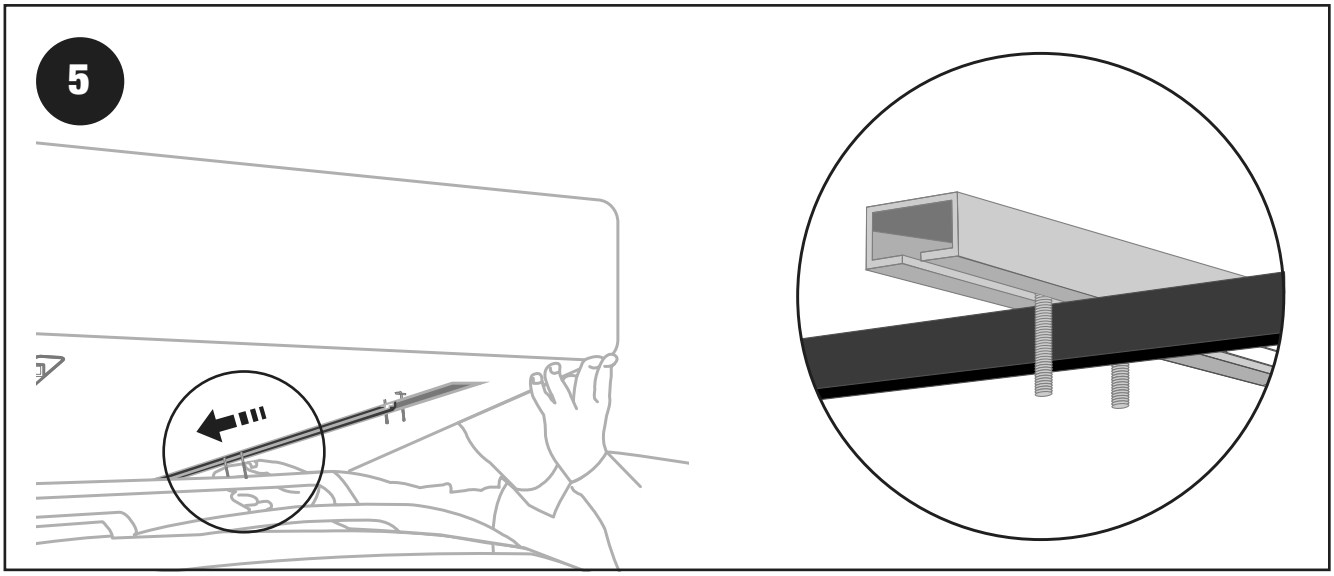
5

6

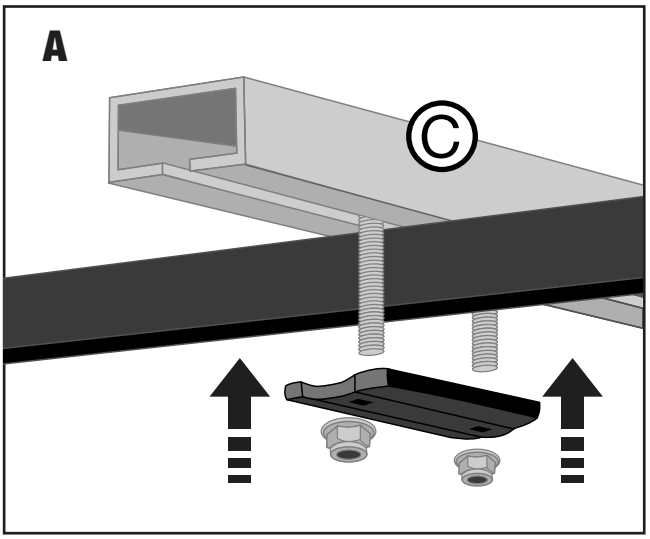

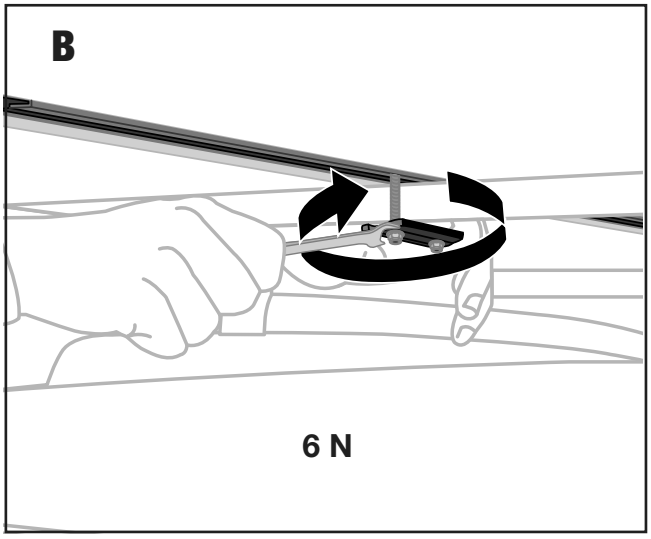

7

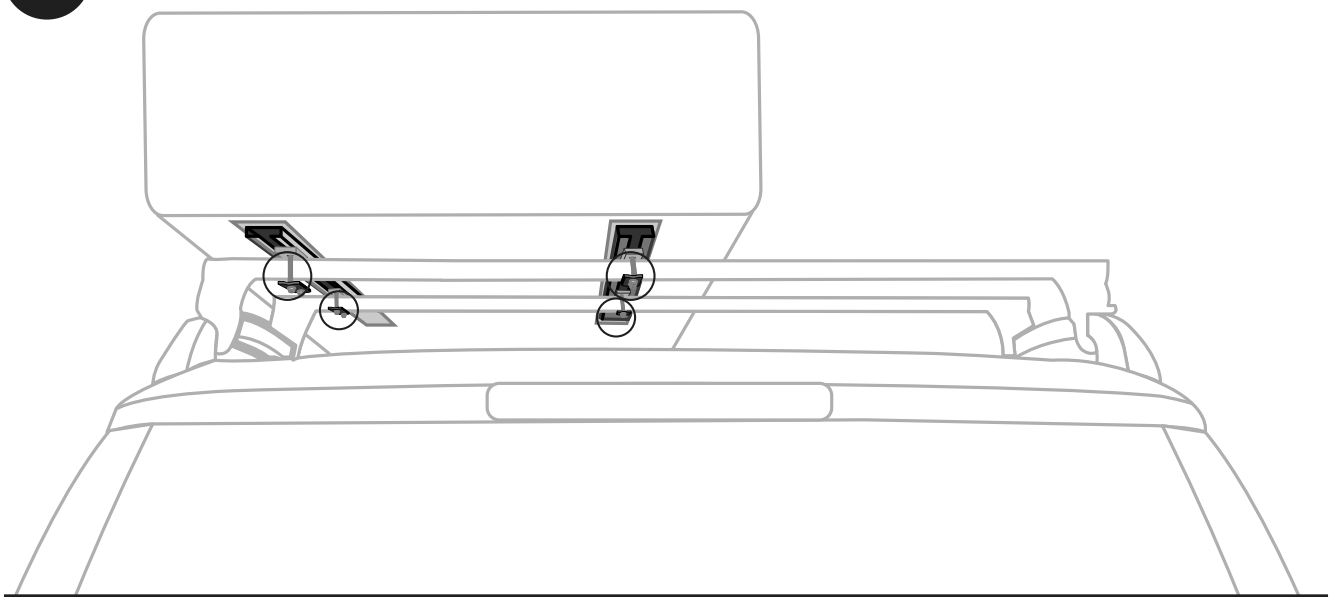

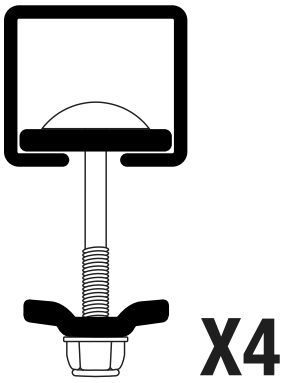

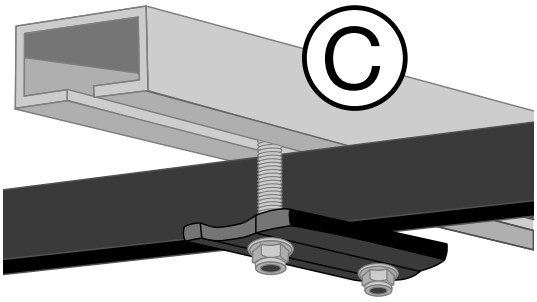

OPENING

Apertura • Overture • Öffnung

8

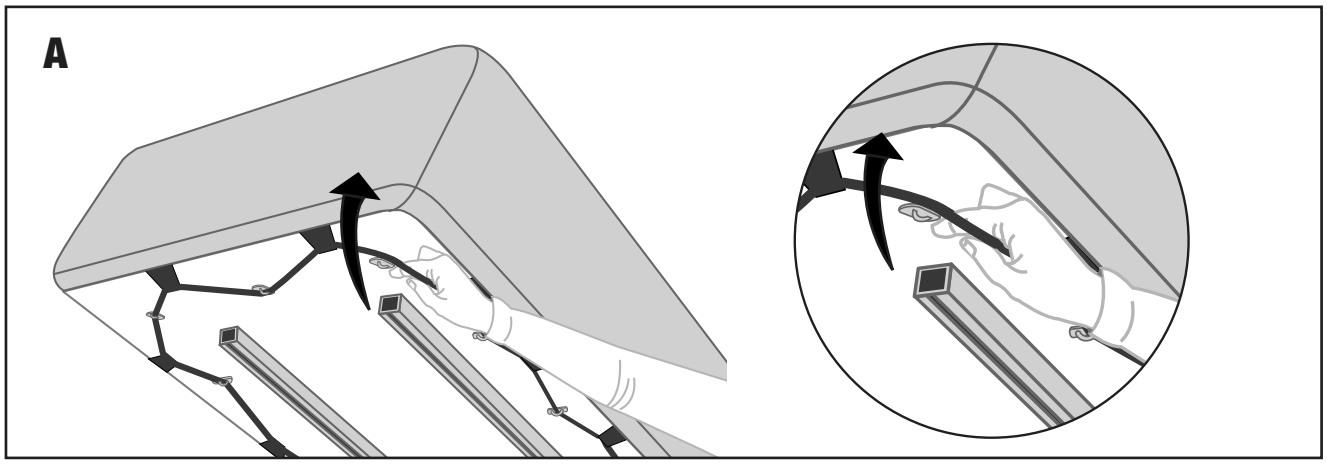

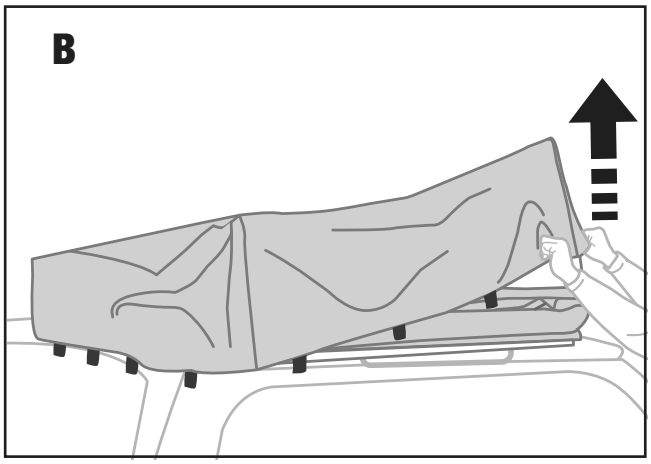

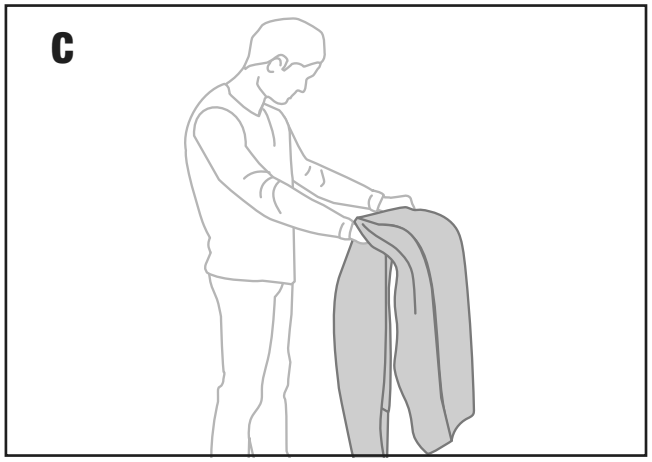

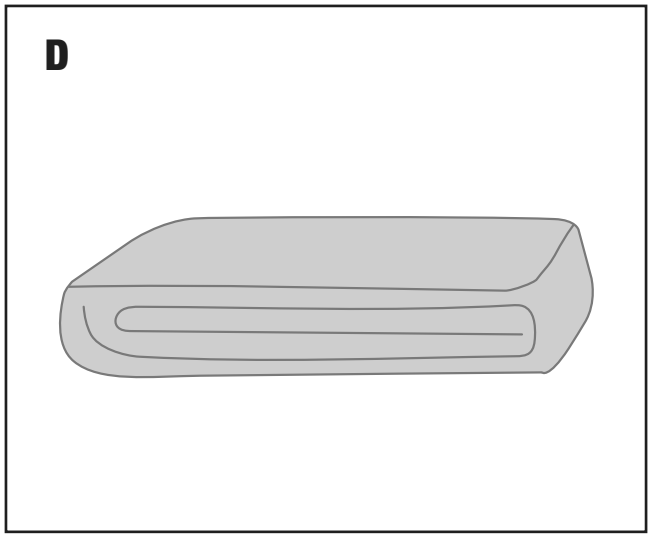

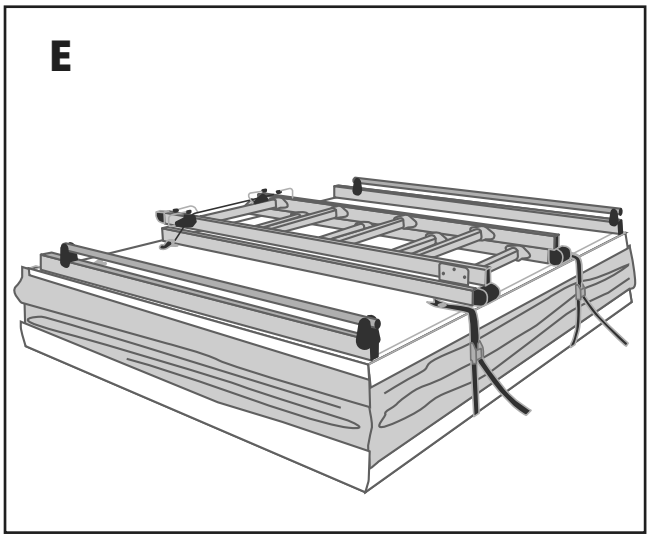

9

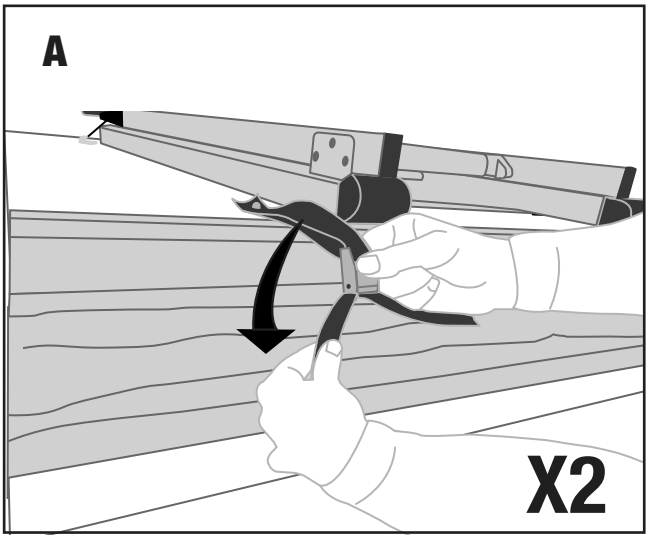

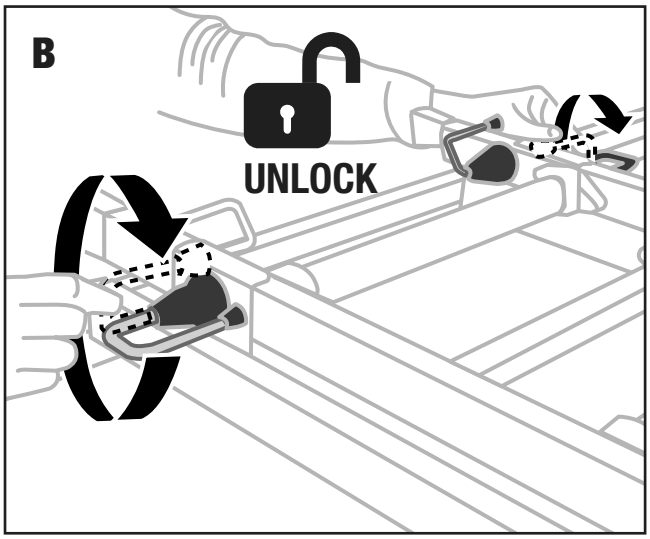

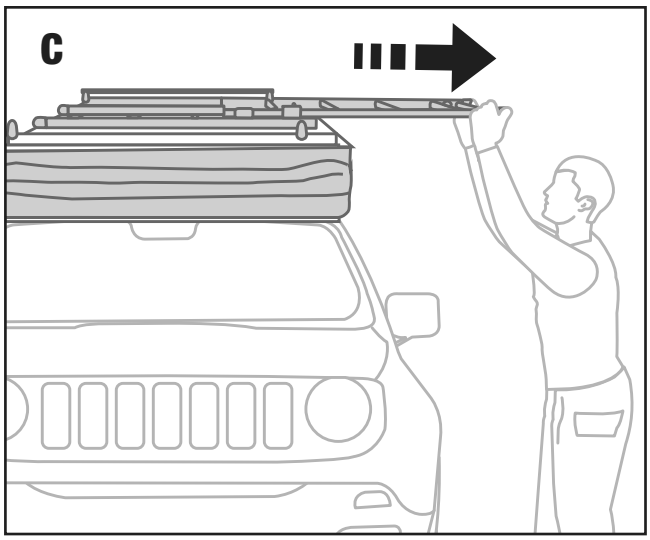

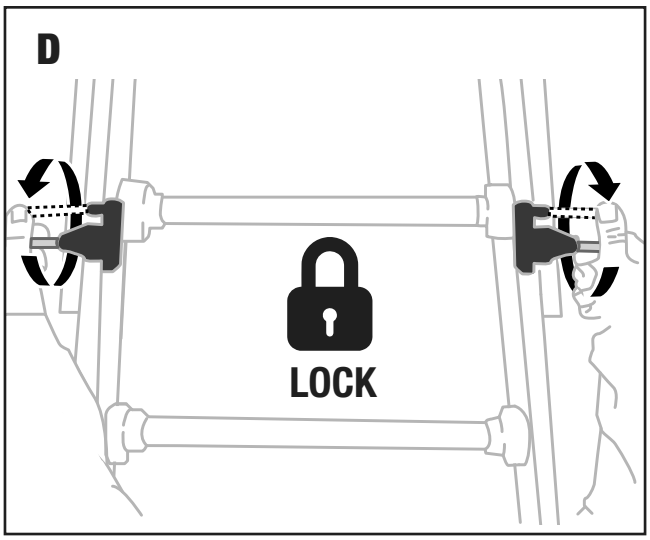

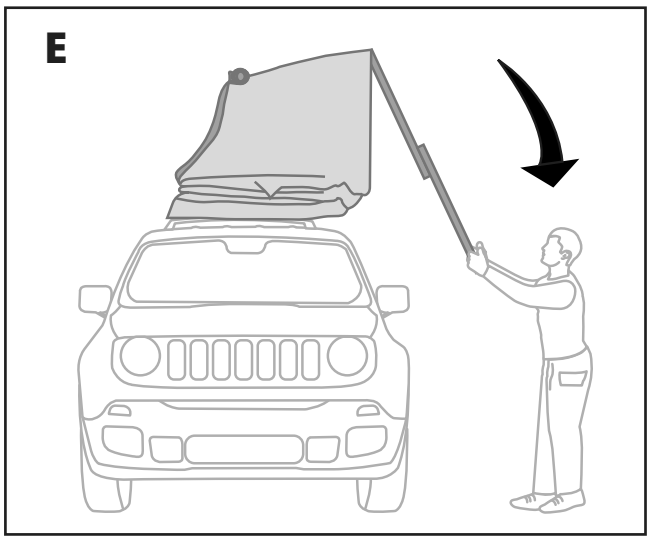

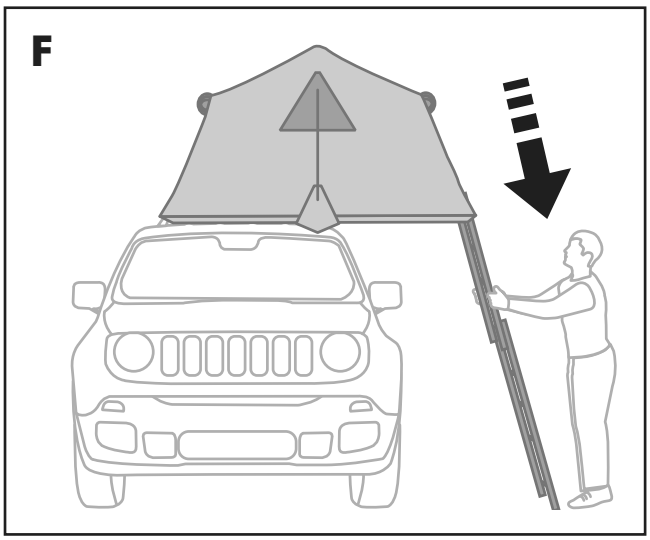

10

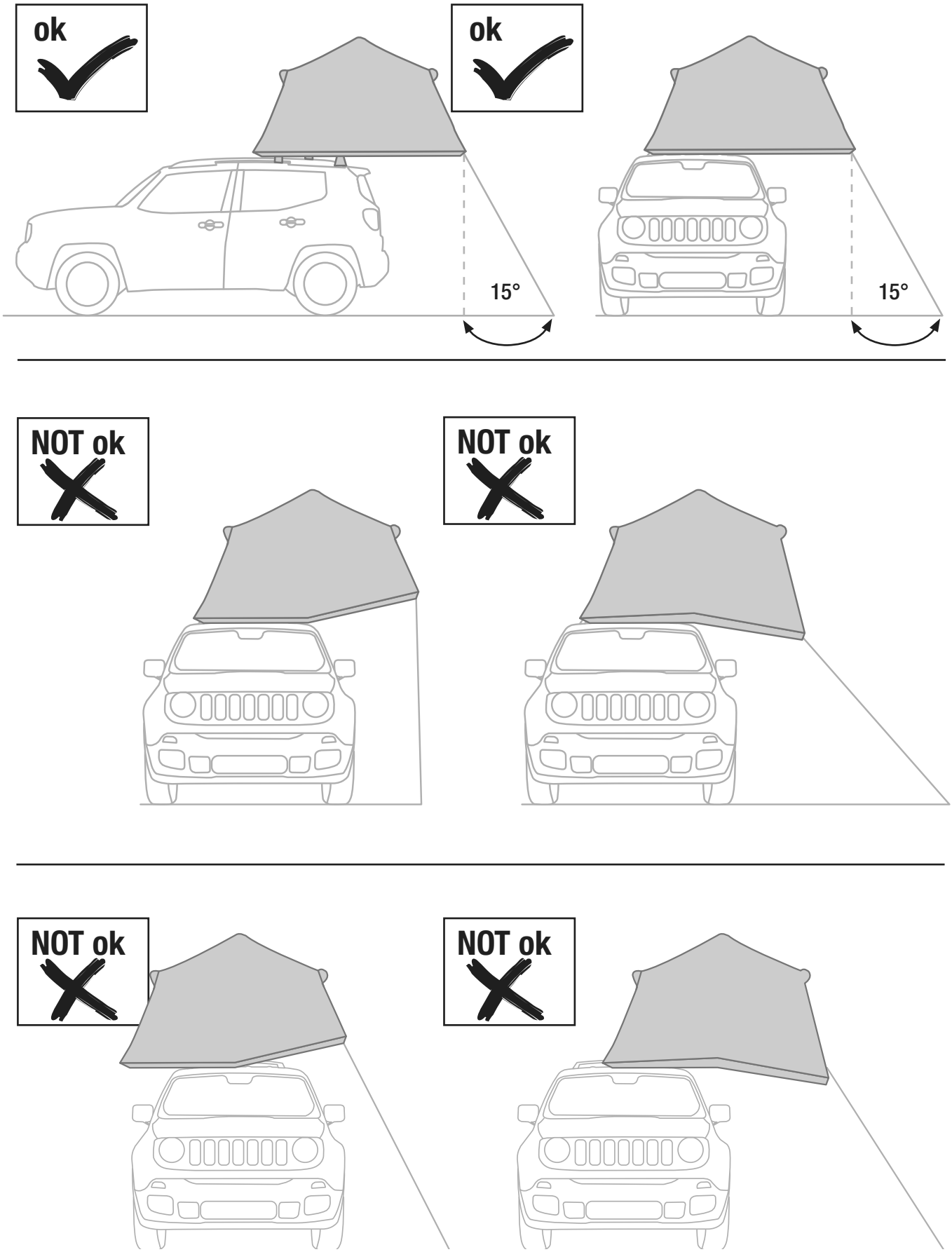

11

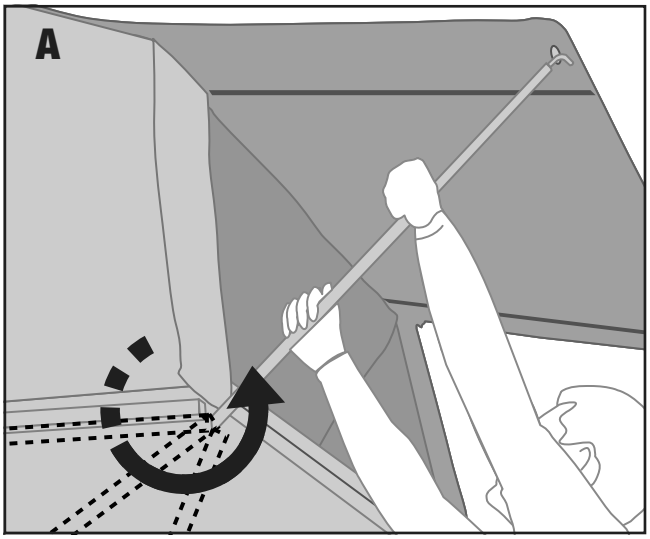

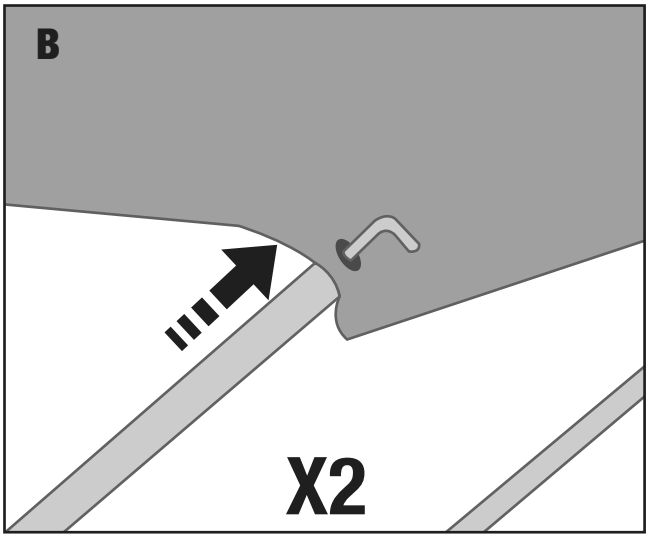

CLOSING

Chiusura • Fermeture • Schließung

12

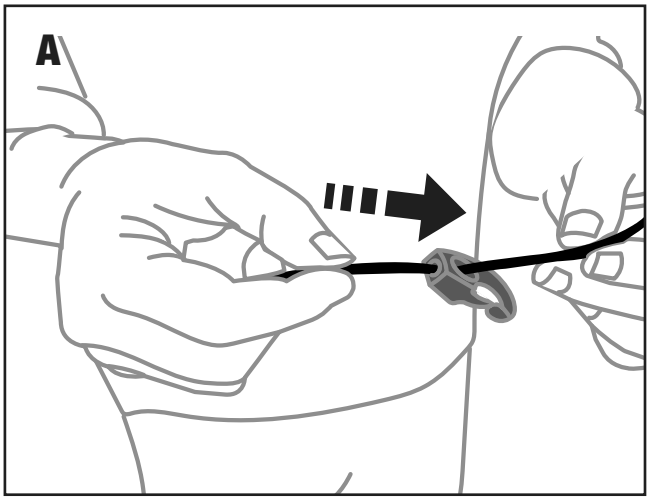

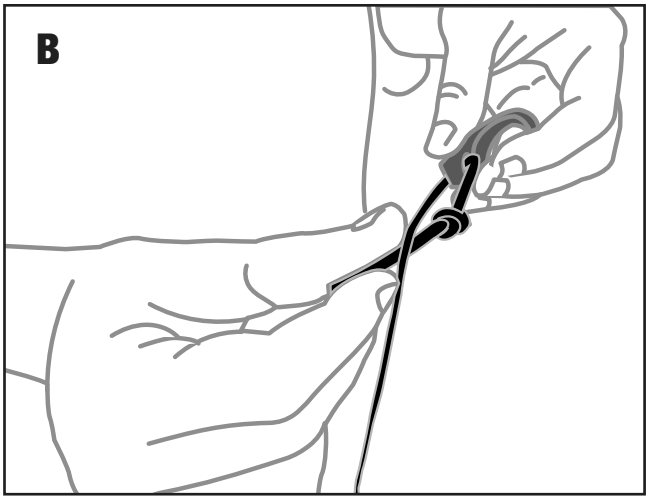

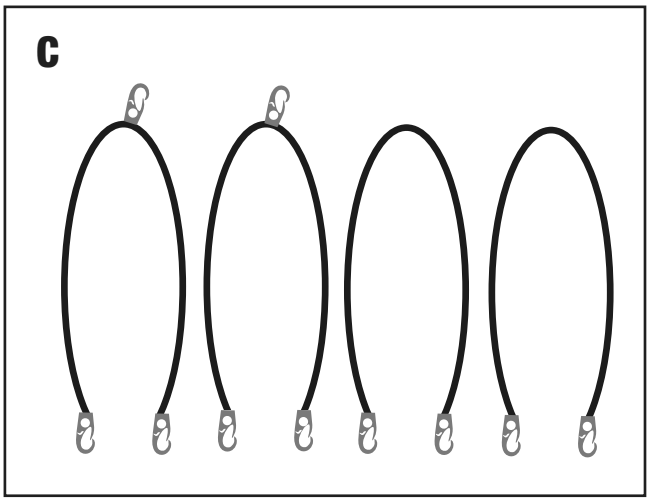

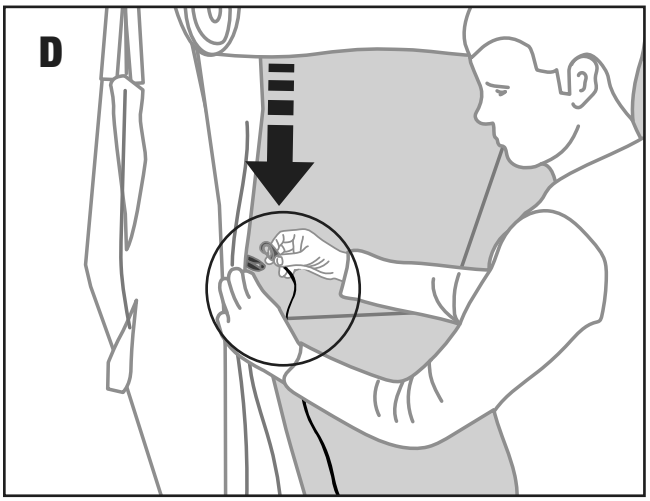

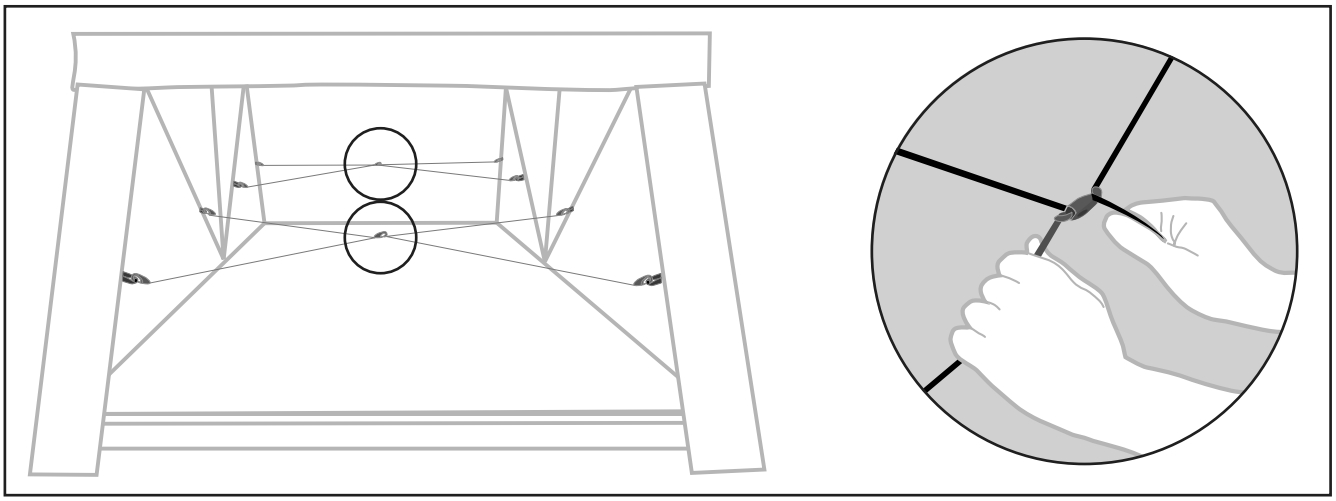

13

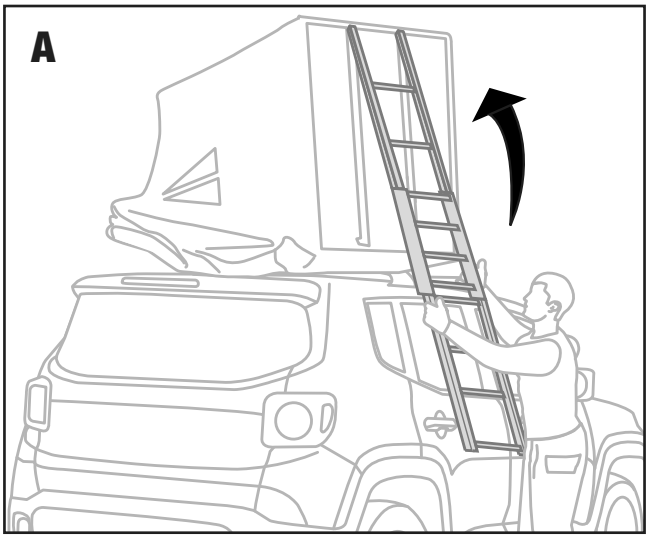

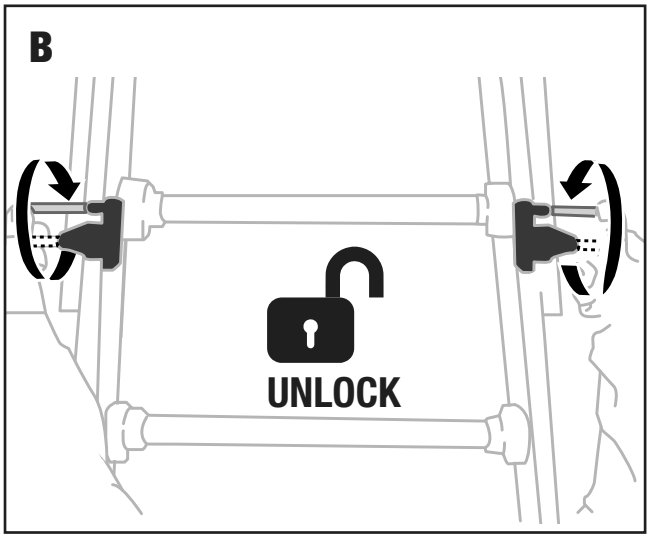

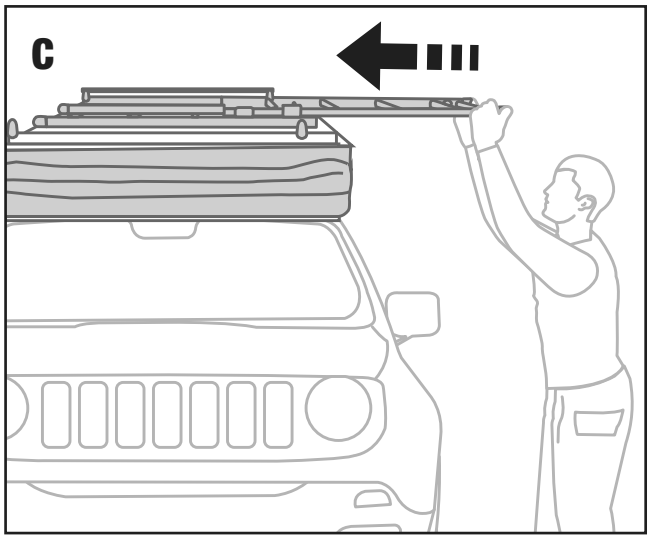

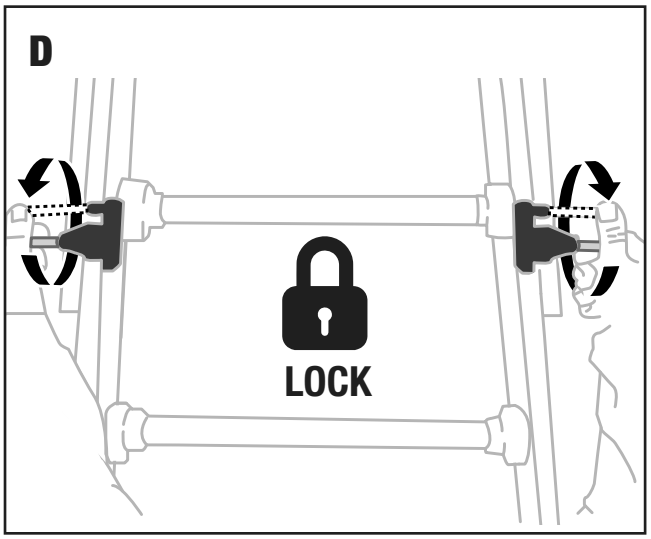

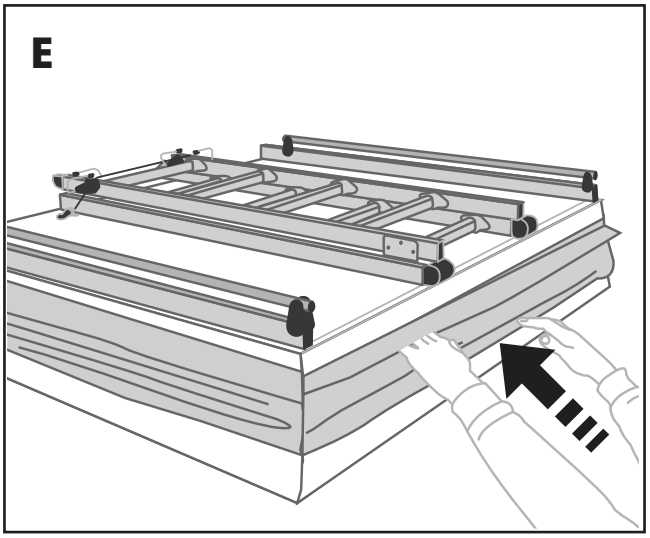

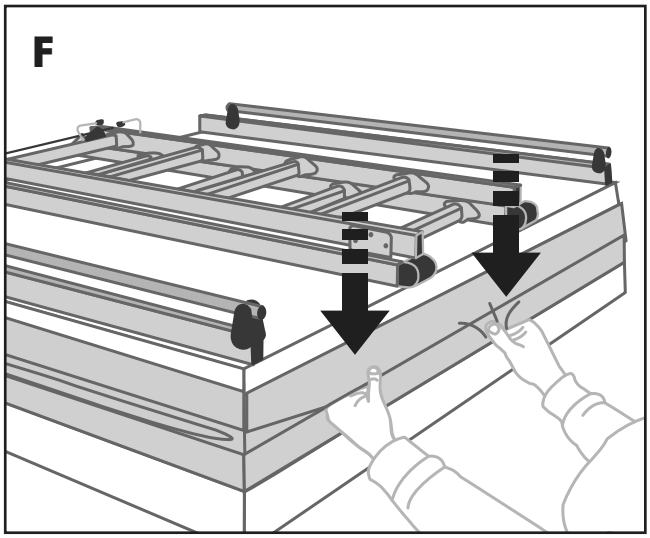

14

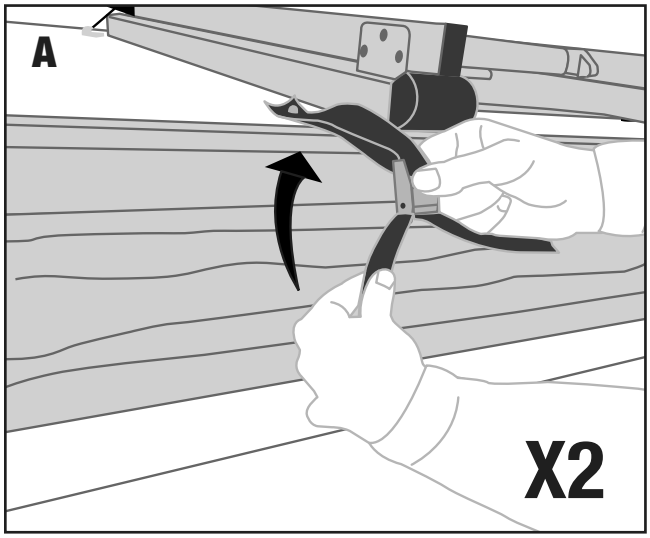

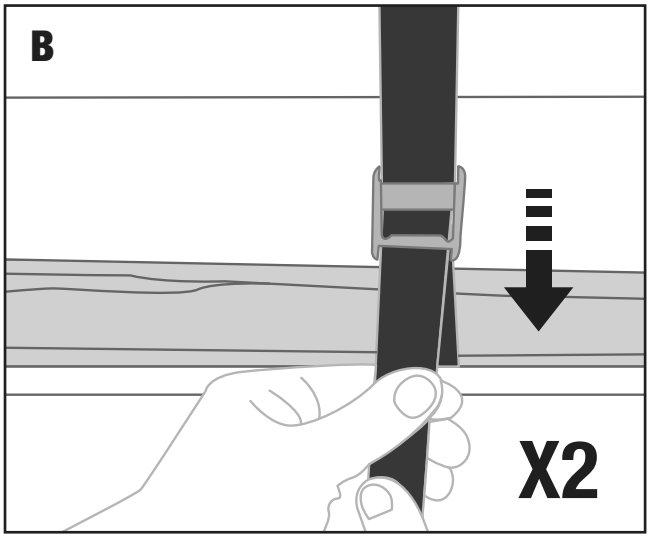

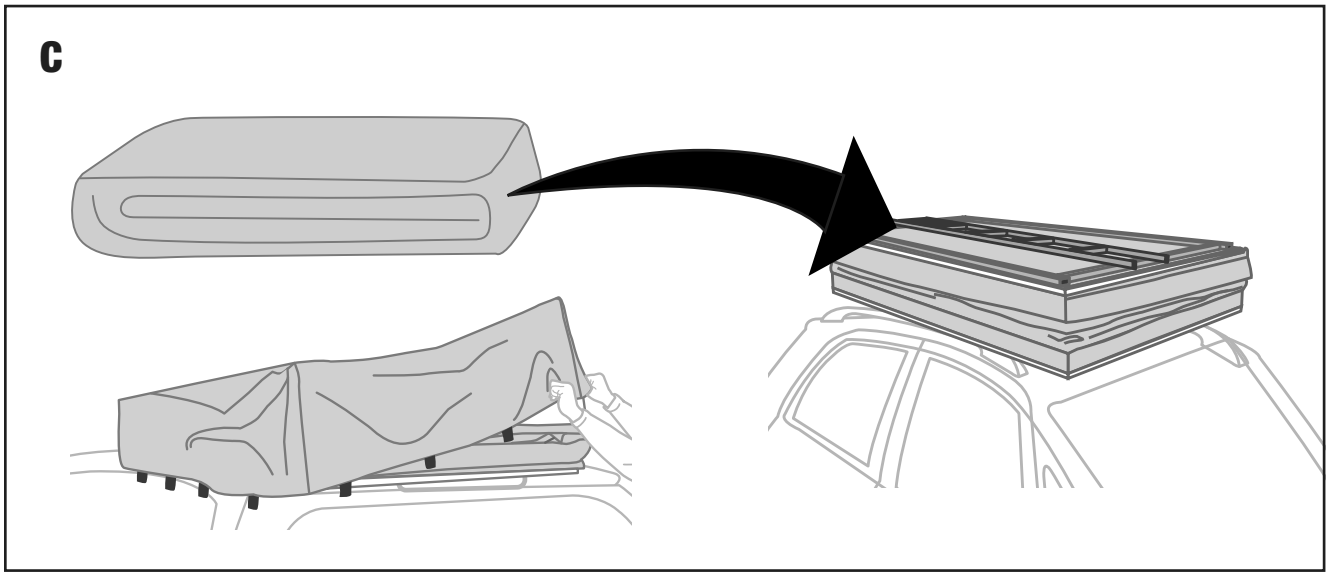

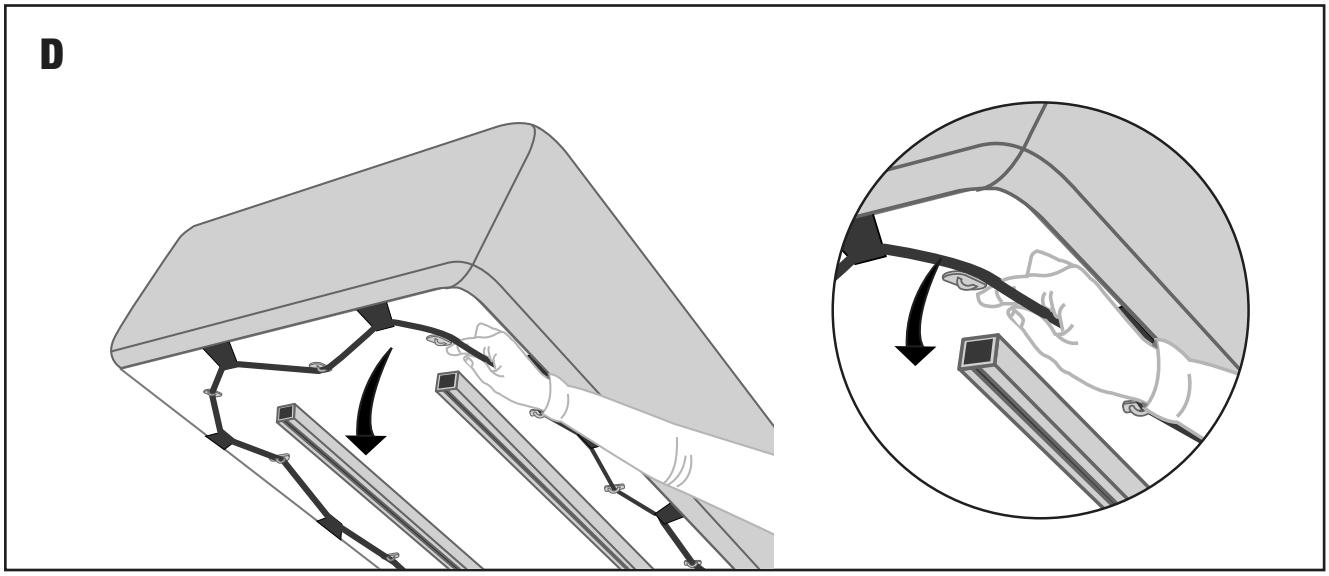

15

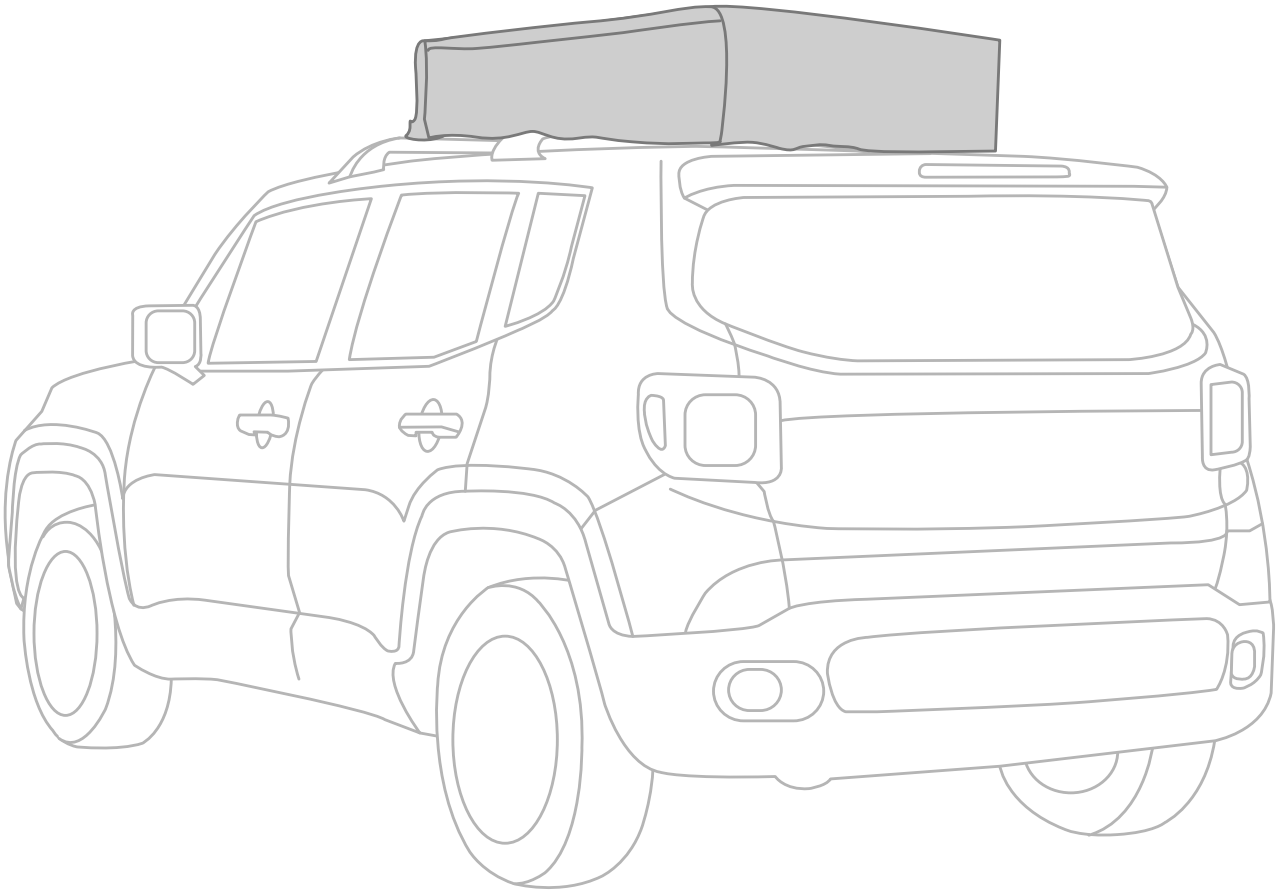

HANDLE WITH CARE

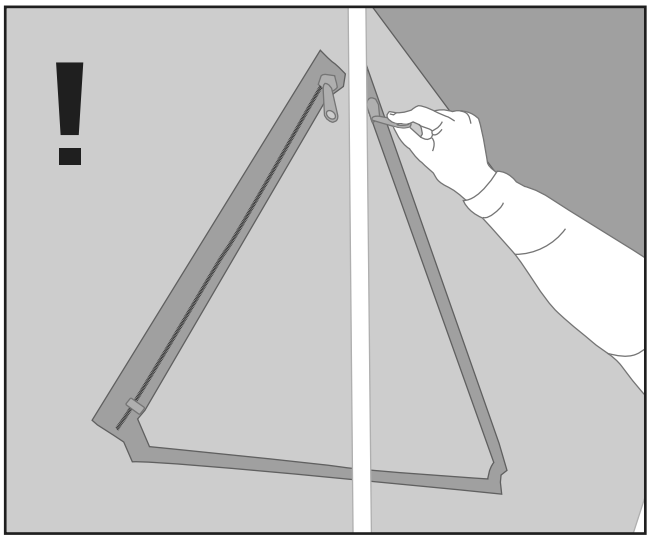

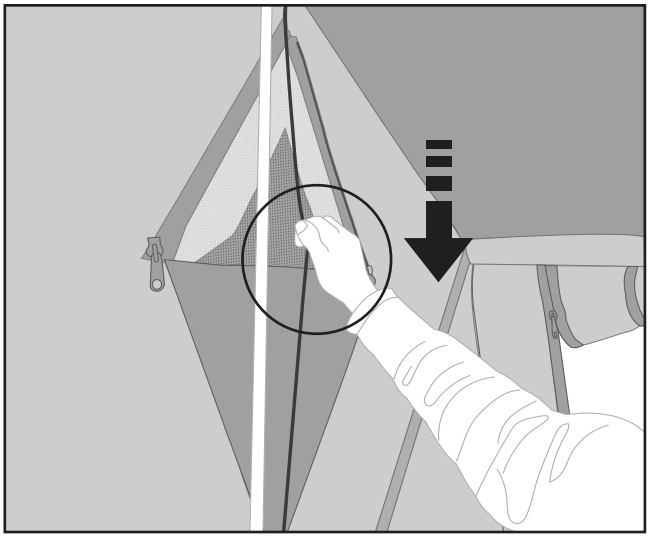

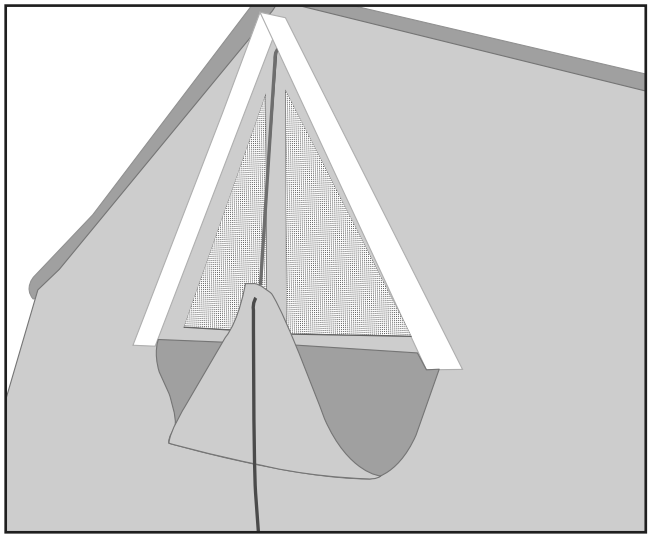

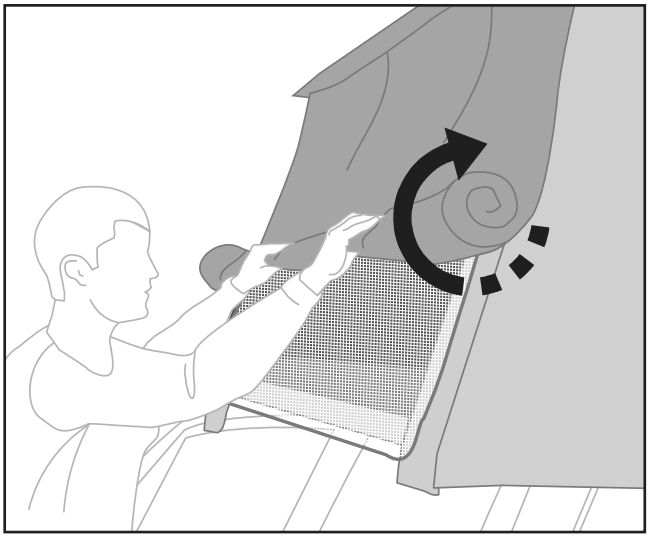

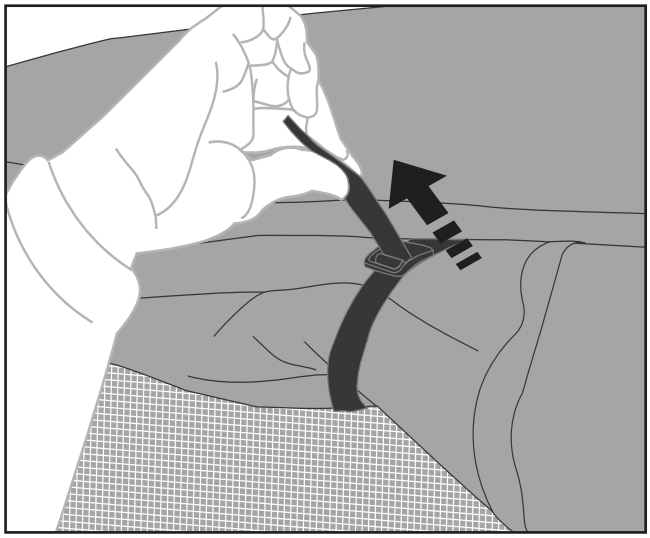

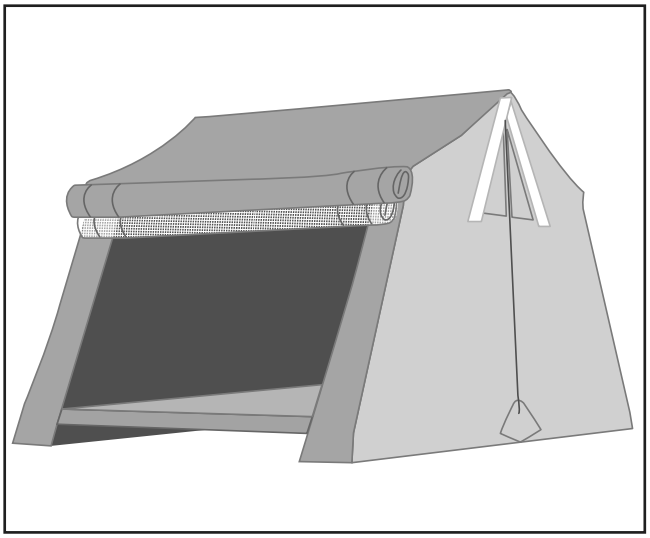

WARNINGS

Avvertenze • Avertissement • Warnungen

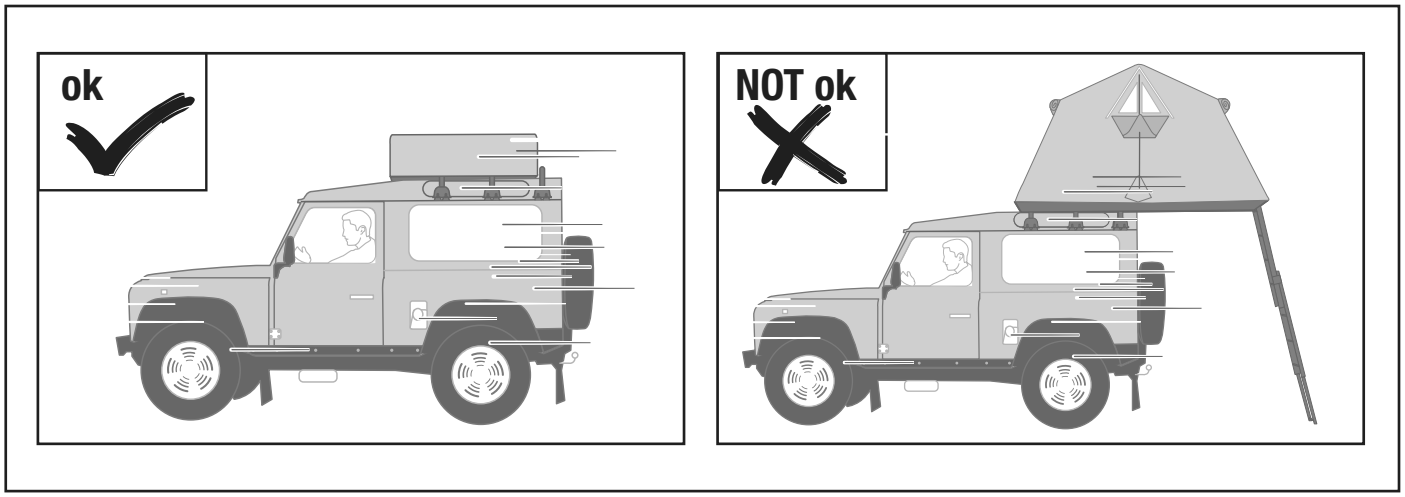

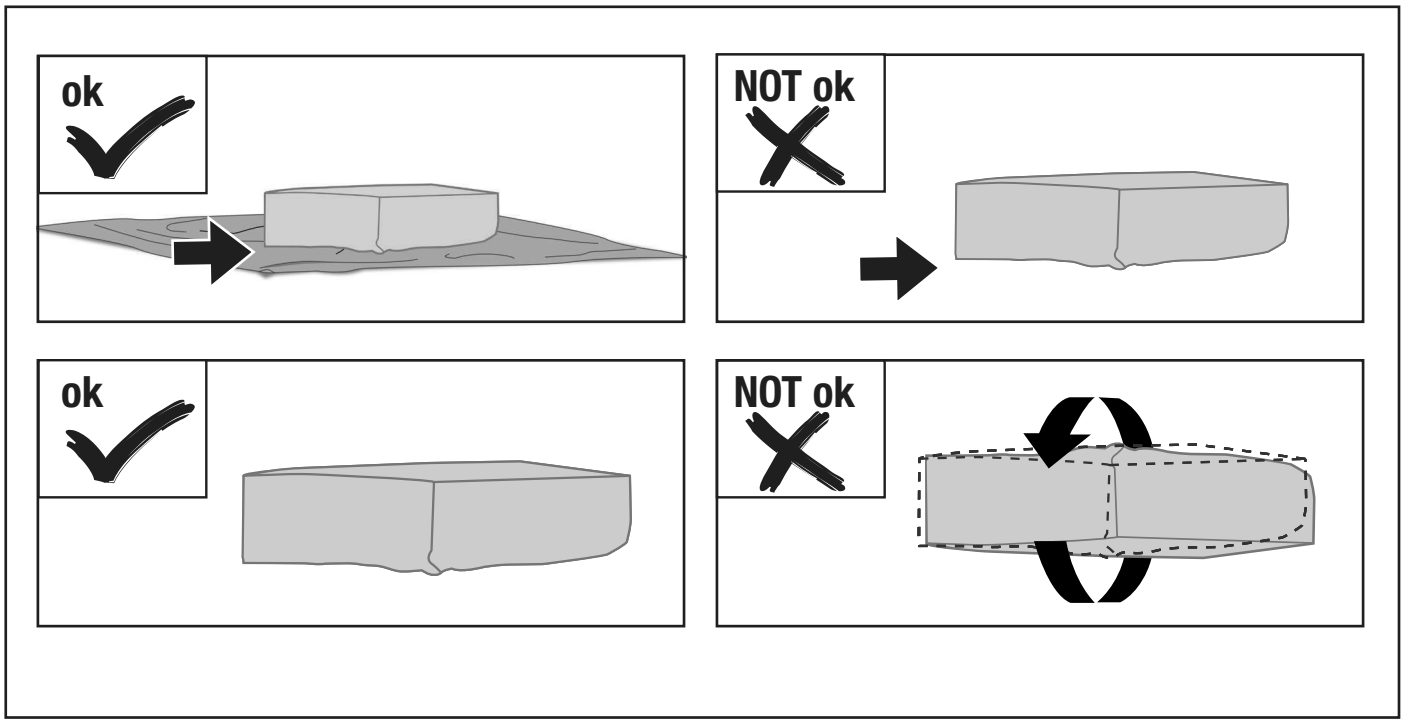

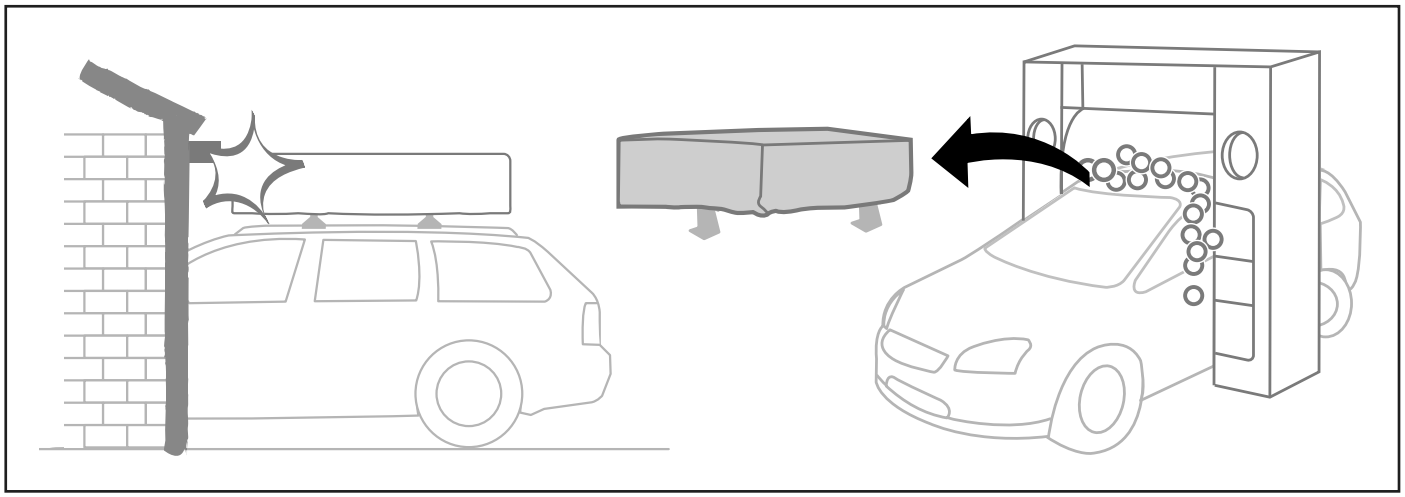

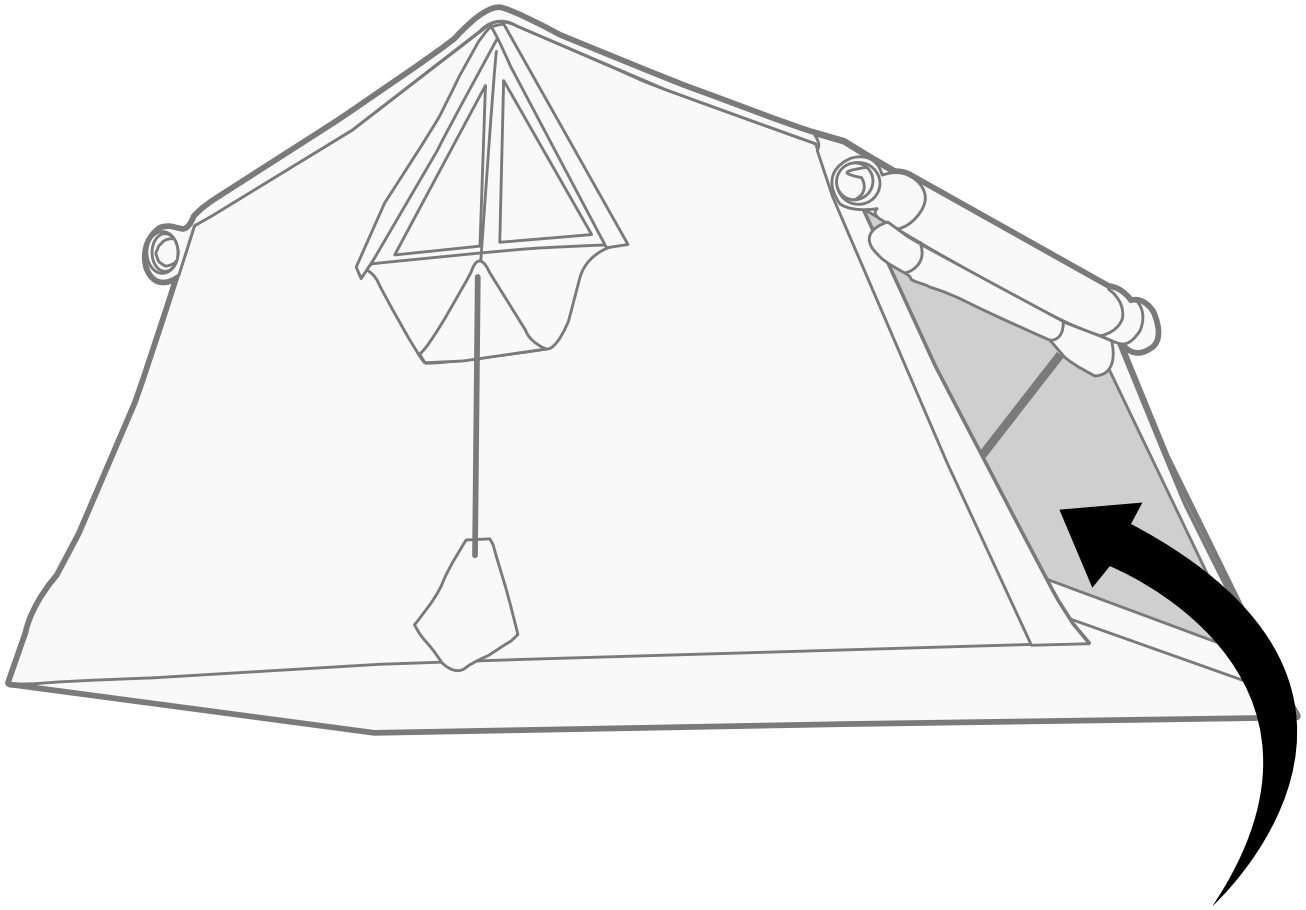

AUTOHOME® produced by
Zifer Italia Srl
Viale Risorgimento, 23
46017 Rivarolo Mantovano
(Mantova) Italy
Tel. +39 0376 99590
+39 0376 958164
Fax +39 0376 958088
AUTOHOME-OFFICIAL.COM
info@autohome.it

MADE IN ITALY

Autohome Official-Page

autohome_official

PRODUCT QUALITY CERTIFICATION